Working to Perfect the Flow of Energy

PJM Manual 01

Control Center and Data Exchange Requirements

Revision: 30

Effective Date: July 29, 2015

Prepared by

System Operations Division

© PJM 2015

PJM Manual 01

Control Center Requirements

Table of Contents

Table of Contents ii
Table of Exhibits v
Approval 1
Current Revision 1
Introduction 2
About This Manual 2
Intended Audience 2
References 3
Using This Manual 3
What You Will Find In This Manual 3
Section 1: PJM Systems 4
1.1 Energy Management System (EMS) 5
1.2 Generation Management System (GMS) 6
1.3 Synchrophasor System 6
1.4 Data Historian System 6
1.5 ExSchedule 7
1.6 Two Settlement System (eMKT) 7
1.7 Dispatch Management Tool (DMT) 8
1.8 Open Access Same-time Information System (OASIS) 8
1.9 Other eSuite Tools (Power Meter, InSchedules, eLRS, eFTR) 8
1.10 Planning Systems 9
Section 2: Member Control Center Requirements 10
2.1 PJM Control Center Categories 10
2.2 PJM Member Data Exchange 11
2.3 Computer System Requirements 12
2.3.1 Transmission Monitoring Capability 12
2.3.2 Data Backup & Archiving 13
2.3.3 Computer System Security 13
2.3.4 System Maintenance 13
2.3.5 Expansion Capability 13
2.3.6 Data Integrity 14
2.4 Communications Requirements 15
2.5 Facilities Requirements 15
2.5.1 Environmental Characteristics 16
2.5.2 Power Supply & Conditioning 16
2.5.3 Area Access Security 17
2.5.4 Information Flow to Control Room Personnel 17
2.5.5 Smoke & Fire Protection 17
2.5.6 Recovery Procedures 17

2.5.7 Disclosure of EMS Data to Transmission Owners 20
2.6 CONTROL CENTER STAFFING 20
2.6.1 Staffing Upon Loss of an EMS or a 765 kV, 500 kV, or 345 kV RTU 21
2.7 PJM MEMBER BACK UP CAPABILITY REQUIRED TO SUPPORT PJM IN ITS TOP ROLE 21
Section 3: Data Exchange Requirements 23
3.1 INTRODUCTION 23
3.2 ENERGY MANAGEMENT SYSTEM (EMS) DATA EXCHANGE 24
3.2.1 EMS Communications System 24
3.2.2 PJM EMS Communication Protocols 24
3.2.3 EMS Data Exchange 24
3.2.4 PJMnet Communications System 26
3.3 SYNCHROPHASOR SYSTEM DATA EXCHANGE 27
3.3.1 Synchrophasor Network 27
3.3.2 Synchrophasor Data Exchange 28
3.4 OASIS INFORMATION EXCHANGE 28
3.4.1 Transmission Customer Communications 28
3.4.2 Transmission Provider Communications 29
3.5 EMS BACKUP COMMUNICATIONS 29
3.6 REAL-TIME ANALYSIS MONITORING REQUIREMENTS FOR SYSTEM SECURITY 29
3.7 DISPATCHING REQUIREMENTS 30
Section 4: Voice Communications 32
4.1 DISPATCH VOICE & FACSIMILE COMMUNICATIONS 32
4.1.1 All Call System 32
4.1.2 Ring Down Circuits 32
4.1.3 Manual Dial 33
4.1.4 Facsimile Communications 33
4.2 ALTERNATIVE VOICE COMMUNICATIONS 33
4.2.1 Business Voice System 33
4.2.2 Cellular Telephones 33
4.2.3 Satellite Telephones 33
4.2.4 Three Part Communications 34
4.3 PJM COMMUNICATION PROTOCOL 36
4.3.1 Purpose 36
4.3.2 Applicability 36
4.3.3 Definitions 36
4.3.4 Communication Protocols 37
4.3.5 Communications Protocols Training Requirements 39
4.3.6 Communication Protocol Assessment 39
Section 5: Metering Requirements 40
5.1 PURPOSE & CRITERIA 40
5.2 GENERAL GUIDELINES 40
5.3 PRIMARY METERING REQUIREMENTS 41
5.3.1 Accuracy 42
5.3.2 Backup Metering Requirements 42
5.3.3 Location of Meter Points 42
5.3.4 Alternative Approach 43

5.3.5 Tie Line Telemetry Specification 43
5.3.6 Geographically Non-Contiguous Load 46
5.3.7 Maintenance 46
5.4 METER ACCURACY STANDARDS 46
5.4.1 Purpose 46
5.4.2 General Guidelines 47
5.4.3 Primary Metering Accuracy 47
5.5 SYSTEM CONTROL MONITORING REQUIREMENTS 47
5.5.1 System Control Data 48
5.5.2 Area Regulation 48
5.5.3 Dispatch Data 49
5.5.4 Reserve Data 49
Attachment A: Information Access Matrix 50
Attachment B: Schedule of Data Submittals 60
Attachment C: Notification of Member Company System Outages 62
Revision History 64

Table of Exhibits

Exhibit 1: Primary Transducer Accuracy Guideline 47
Exhibit 2: Generation Scheduling Services 51
Exhibit 3: EMS Services 53
Exhibit 4: Historical EMS Data Services 54
Exhibit 5: Transmission Maintenance Planning Services 55
Exhibit 6: Transmission Services 56
Exhibit 7: Energy Transaction Services 57
Exhibit 8: Long-term Planning Services 58
Exhibit 9: PJM Administration Services 59

Approval

Approval Date: 07/29/2015
Effective Date: 07/29/2015

Mike Del Viscio, Manager

Real Time Data Management

Current Revision

Revision 30 (07/29/2015):

- Replaced references to retired Manual 4 in sections 1.8, 2.2, and 3.4 with the OASIS User Guide.
- Changed email address for phasor outages in section 3.3.2 Synchrophasor Data Exchange
- Added ICCP Object ID requirements to Section 5.3.5 Tie Line Telemetry Specification and Requirements
- Added monitoring of LTC tap setting in Section 3.6 Real-Time Analysis Monitoring Requirements for System Security
- Removed requirement for Status Data, Transformer Fixed Tap Settings (No-Load), in Section 3.6 Real-Time Analysis Monitoring Requirements for System Security.
- Added an entry for TO GeoMagnetic Disturbance (GMD) data submittal to the table in Appendix B: Schedule of Data Submittals.

Introduction

Welcome to the *PJM Manual for Control Center Requirements*. In this Introduction, you will find the following information:

- What you can expect from the PJM Manuals in general (see "*About PJM Manuals*").
- What you can expect from this PJM Manual (see "*About This Manual*").
- How to use this manual (see "*Using This Manual*").

About PJM Manuals

The PJM Manuals are the instructions, rules, procedures, and guidelines established by the PJM Interconnection, L.L.C. for the operation, planning, and accounting requirements of the PJM RTO and the PJM Energy Market. The manuals are grouped under the following categories:

- Transmission
- PJM Energy Market
- Generation and transmission interconnection
- Reserve
- Accounting and Billing
- PJM administrative services

For a complete list of all PJM Manuals, go to www.pjm.com and select "Manuals" under the "Documents" pull-down menu.

About This Manual

The *PJM Manual for Control Center Requirements* is one of a series of manuals within the Transmission Owners manuals. This manual focuses on the requirements for control centers of signatories to the Operating Agreement of PJM Interconnection, L.L.C. The manual describes the telecommunication linkages to the PJM Interconnection, L.L.C. and the recommended characteristics of these control center computer systems and the buildings housing these systems. It also summarizes the computer services and systems at the PJM Interconnection, the standards for billing quality MWh meters, and meter accuracy standards.

PJM staff will review and update this manual on an annual basis and review the updates with PJM control center operators.

The *PJM Manual for Control Center Requirements* consists of five sections and two attachments. These sections are listed in the table of contents beginning on page ii.

Intended Audience

The intended audiences for the PJM Manual for Control Center Requirements are:

- Applicants to the Operating Agreement of PJM Interconnection, L.L.C.
- All PJM Members Company Control Rooms

- PJM staff

References

There are some other reference documents that provide both background and detail. The *PJM Manual for Control Center Requirements* does not replace any of the information in these reference documents. These documents are the primary source for specific requirements and implementation details.

Using This Manual

Because we believe that explaining concepts is just as important as presenting the procedures, we start each section with an overview. Then, we present details and procedures. This philosophy is reflected in the way we organize the material in this manual. The following paragraphs provide an orientation to the manual's structure.

What You Will Find In This Manual

- A table of contents that lists two levels of subheadings within each of the sections
- An approval page that lists the required approvals and a brief outline of the current revision
- Sections containing the specific guidelines, requirements, or procedures including PJM actions and PJM Member actions
- Attachments that include additional supporting documents, forms, or tables in this PJM Manual
- A section at the end detailing all previous revisions of this PJM Manual
- PJM Operations Manager will review this manual on a minimum of an annual basis for updates and changes and review with the PJM Systems Operation Subcommittee.

Section 1: PJM Systems

Welcome to the *PJM Systems* section of the *PJM Manual for Control Center Requirements*. In this section you will find the following information:

- Descriptions of the PJM control centers systems (see "*PJM Systems*").

PJM Systems

PJM operates several functional systems that directly interface with PJM Members. Systems that are wholly internal to PJM and have no direct PJM Member interface are not listed.

The following systems are used to operate the PJM RTO and support the Energy Market:

- Energy Management System (EMS)
- Generation Management System (GMS)
- PJM SCADA System
- PJM Synchrophasor System
- Data Historian System
- ExSchedule
- Two Settlement System (eMKT)
- Dispatch Management Tool (DMT)
- Regulation Market
- Synchronized Reserve Market
- Operations Planning Tools
- Available Transfer Capability (ATC) Program
- Open Access Same-Time Information System (OASIS)
- Dispatcher Analysis and Reporting Tool (eDART)
- Other eSuite Tools (Power Meter, InSchedules, eFTR, eLRS)
- PJM Voice Communications
- Reliability Coordinator Information System (RCIS)
- Security Constrained Economic Dispatch (SCED)

The following systems are used for planning purposes:

- Generator Availability Data System (eGADS)
- Capacity Reporting Program (eRPM)
- Central Planning Database
- Transmission Planning Tools

1.1 Energy Management System (EMS)

The PJM EMS performs the real-time monitoring, security analysis, and generation control functions for the entire PJM region. The EMS major subsystems:

- *Real-Time EMS* — the Real-time EMS is responsible for monitoring, analysis, and real-time coordination of the PJM region. It includes a full complement of monitoring, generation control, state estimation and security analysis software. PJM Members supply telemeter data to the PJM real-time EMS and may receive data and control signals from the PJM real-time EMS.
    - Communications Front End (CFE)
    - The EMS Communications Front End processors communicate to the field via Distributed Network Protocol (DNP). This allows PJM to communicate directly with individual generators or smaller Control Centers.
    - The CFE system allows transfer of both generation and revenue data to PJM as well as Automatic Generation Control (AGC), set point, device control, and other functions to the data concentrator (e.g. Remote Terminal Unit, Generator Control System, etc.) at the Member's site,
- *DTS* — The Dispatcher Training Simulator (DTS) system is used to train PJM dispatchers. Member company operators participate in Fall Restoration Drills using PJM's DTS.
- *Development System* — The Development System allows the PJM staff to develop software, database, and displays for the Real-Time EMS, and DTS systems, without interfering with the operation of those systems. There is no direct interaction between PJM Members and the Development System.
- *Test System* — The Test System provides an independent test environment to validate changes developed on the Development System, prior to installing them on the Real-Time EMS. PJM Members may exchange telemetry with the Test System to verify telemeter points, to test data communications, to test communications failover capabilities and to test application programs.
- *Process Control Test (PCT) System* — The PCT system is a parallel test system with access to live data used to test and verify software and database changes prior to promoting those changes to the on-line production EMS. There is no direct interaction between PJM Members and the PCT system.
- EMS Reliability Configuration
- For reliability purposes, each of the Real-Time EMS systems described above is configured in a redundant or fault tolerant manner (depending on the nature of the subsystem) at each site (Valley Forge and Milford). In addition, the two sites are synchronized and operated from continuously staffed Control Centers at the respective locations.
- The Core elements of the Real-Time EMS systems (ICCP, SCADA, and AGC) are operated in a Dual Primary mode (both sites have these elements of the EMS as primary), with either site having the functionality of continuing to operate the grid by itself in the event of failure of the other.

- The Transmission Network Applications are operated in a Primary/Secondary mode with the configuration updates synchronized to the secondary so that it can either be slaved off of the primary or operate independently and still be ready to take over for the primary in the event of a primary failure or routine switchover.
- In the event of a catastrophic failure of systems at both sites, rapid recovery procedures are in place to recover the systems. While that recovery is occurring, Transmission Operating Authority would be temporarily turned over to the Transmission Owners and the GMS System would be used by PJM Dispatchers to provide the Balancing Authority function.
- EMS Support Systems
- The functionality as well as reliability requirements of each support system dictate its configuration:
- Test is site redundant/fault tolerant at each site and has a presence at each site as well as operates in modes (e.g. Dual Primary) like the Real Time EMS in order to support testing of new functionality.
- PCT is configured for a single system at each site that operates in modes (e.g. Dual Primary) like the Real Time EMS to support testing of (for example) new model functionality.
- Development as well as DTS are single systems. Development is located at Valley Forge, DTS is located at Milford

1.2 Generation Management System (GMS)

PJM has retained and repurposed the GMS to be a BA Emergency Backup system for the PJM EMS. PJM Members with frequency sources and external tie connections continuously provide data to the GMS system. This data, in conjunction with Frequency Standards and constantly updated Scheduling information provide an ongoing checkpoint for the ACE calculation as well as a Balancing Authority Emergency Backup System**.**

1.3 Synchrophasor System

A dedicated, secure Wide Area Network is streaming system data from member synchrophasors to PJM data centers, and between PJM and other RTOs and ISOs. The data is used in support of voltage stability, oscillation monitoring and detection, situational awareness, the archival system, model analysis, and as a Wide Area View, etc. It provides for the exchange of information among those who need synchrophasor and operating reliability data in support of their reliability responsibilities.

1.4 Data Historian System

The Data Historian System serves as a data archive for operational data in near-real-time. It provides visualization tools for presenting data to operators and provides a permanent archive of data for post-event study and analysis. Telemeter data is archived from EMS and other operational data is imported from other sources, including Market Systems.

1.5 ExSchedule

The ExSchedule records customer requests for interchange transactions, the bulk power scheduled between PJM and neighboring regions. PJM personnel uses ExSchedule to process and schedule these transactions. ExSchedule validates PJM ramp, use of transmission reservation rights, and other PJM scheduling business rules as described in the PJM Manual for Scheduling Operations.

1.6 Two Settlement System (eMKT)

The Two-Settlement system consists of two markets, a day-ahead market and a real-time balancing market. The Day-ahead Market is a forward market in which hourly clearing prices are calculated for each hour of the next operating day based on generation offers, demand bids Increment offers, Decrement bids and bilateral transaction schedules submitted into the Day-ahead Market. The balancing market is the real-time energy market in which the clearing prices are calculated every five minutes based on the actual system operations security-constrained economic dispatch. Separate accounting settlements are performed for each market, the day-ahead market settlement is based on scheduled hourly quantities and on day-ahead hourly prices, the balancing settlement is based on actual hourly (integrated) quantity deviations from day-ahead scheduled quantities and on real-time prices integrated over the hour. The day-ahead price calculations and the balancing (real-time) price calculations are based on the concept of Locational Marginal Pricing.

The Day-ahead Market enables participants to purchase and sell energy at binding day-ahead prices. It also allows transmission customers to schedule bilateral transactions at binding day-ahead congestion charges based on the differences in LMPs between the transaction source and sink. Load Serving Entities (LSEs) may submit hourly demand schedules, including any price sensitive demand, for the amount of demand that they wish to lock-in at day-ahead prices. Any generator that is a PJM designated capacity resource must submit a bid schedule into the day-ahead market even if it is self-scheduled or unavailable due to outage. Other generators have the option to bid into the day-ahead market. Transmission customers may submit fixed, dispatchable or 'up to' congestion bid bilateral transaction schedules into the day-ahead market and may specify whether they are willing to pay congestion charges or wish to be curtailed if congestion occurs in the Real-time Market. All spot purchases and sales in the day-ahead market are settled at the day-ahead prices. After the daily quote period closes, PJM will calculate the day-ahead schedule based on the bids, offers and schedules submitted, using the scheduling programs described in section 2 of this manual, based on least-cost, security constrained unit commitment and dispatch for each hour of the next operating day. The day-ahead scheduling process will incorporate PJM reliability requirements and reserve obligations into the analysis. The resulting Day-ahead hourly schedules and Day-ahead LMPs represent binding financial commitments to the Market Participants. Financial Transmission Rights (FTRs) are accounted for at the Day-ahead LMP values (see the *PJM Manual for* ***Financial Transmission Rights (M-06)***).

The Real-time Energy Market is based on actual real-time operations. Generators that are designated PJM capacity resources that are available but not selected in the day-ahead scheduling may alter their bids for use in the Real-time Energy Market during the Generation Rebidding Period from 4:00 PM to 6:00 PM (otherwise the original bids remain in effect for the balancing market). Real-time LMPs are calculated based on actual system operating

conditions as described by the PJM state estimator. LSEs will pay Real-time LMPs for any demand that exceeds their day-ahead scheduled quantities (and will receive revenue for demand deviations below their scheduled quantities). Generators are paid Real-time LMPs for any generation that exceeds their day-ahead scheduled quantities (and will pay for generation deviations below their scheduled quantities). Transmission customers pay congestion charges based on Real-time LMPs for bilateral transaction quantity deviations from day-ahead schedules. All spot purchases and sales in the balancing market are settled at the Real-time LMPs.

1.7 Dispatch Management Tool (DMT)

The Dispatch Management Tool (DMT) is a software tool that is designed to enable the PJM dispatchers to manage generating unit and transmission constraint information and administer the Real-Time Regulation Market. Since many of the current dispatcher logging activities are position independent, the DMT allows each dispatcher position to view the same generation and transmission constraint information simultaneously. This real-time sharing of logging information provides the PJM dispatchers with an efficient communication vehicle to help them perform their job functions more effectively.

The DMT is used by the PJM dispatchers to:

- View and record real-time unit generation information
- View and record unit generation scheduling information
- Review the chronological log of generation events
- Analyze system resources
- Record and calculate regulation assignment information
- Record and calculate Synchronized Reserve assignment information
- View and record real-time transmission constraint information

1.8 Open Access Same-time Information System (OASIS)

The PJM OASIS system maintains transmission and ancillary services information for PJM Members. OASIS operates on a collection of PJM and PJM Member computers linked by private and public networks. For additional information, see the ***OASIS User Guide.***

1.9 Other eSuite Tools (Power Meter, InSchedules, eLRS, eFTR)

The other eSuite tools are all Web-based tools that PJM members use to facilitate the exchange of information with PJM and support various PJM market activities.

a. Curtailment Service Providers will retrieve PJM real time Energy market dispatch instructions, PJM emergency event notifications and PJM synchronized reserve event notifications on a 1 minute basis from PJM eLRS system through published Web Service standards in eLRS web service User Guide. PJM will post dispatch instructions in eLRS based on economic demand response registration or economic demand response dispatch group that has been dispatched in the real time energy market. PJM will post in eLRS emergency event notifications and instructions when it

calls an emergency demand response event. PJM will post in eLRS synchronized reserve event notifications when it calls a synchronized reserve event.

CSP must maintain communication link and continuously check for dispatch instructions and event notifications and provide PJM an acknowledgment for receipt of each dispatch instruction and notification. PJM can provide generic and unsupported software client to perform the required requests and acknowledgements. This is offered as an aid for CSPs that currently do not have web service capabilities.

1.10 Planning Systems

PJM operates several planning systems which are used to run studies for reliability and capacity planning and for transmission planning. Reliability and capacity planning includes the Generating Availability Data System (GADS) database and eRPM are computer programs and databases used for entering, storing, and reporting generating unit data concerning outages, unit performance, and fuel performance. In addition, PJM Members provide information to the PJM Central Planning Database, a database containing planning information relating to generation production costs, load flow analyses, short circuit and system dynamics studies, and LSE load data. Additional details about these planning functions may be found in the ***PJM Manual for Load Forecasting and Analysis (M-19)***, and the ***PJM Manual for PJM Resource Adequacy Analysis(M-20)***.

PJM also performs transmission planning studies. For example, PJM Members staffs provide transmission planning capacity and load data to the PJM Transmission Planning Tool which generates performance adequacy and reliability assessments (see the ***PJM Manual for Transmission Service Request (M-02)***).

Section 2: Member Control Center Requirements

Welcome to the *Control Center Requirements* section of the PJM Manual for *Control Center Requirements*. In this section you will find the following information:

- A description of the different categories of control centers (see "*PJM Control Center Categories*").
- An overview of PJM Member responsibilities (see "*PJM Member Data Exchange*").
- Computer system requirements for Control Centers (see "*Computer System Requirements*").
- Communications requirements (see "*Communications Requirements*")
- Requirements for control center physical facilities (see "*Facilities Requirements*").
- Control center staffing recommendations (see "*Control Center Staffing*").

2.1 PJM Control Center Categories

PJM Members may be involved with transmission ownership, generation ownership, load service operations, and/or PJM Energy Market participation. Depending upon the functions they perform and the services they require from PJM, the control center for each PJM Member will fall into one or more of the designations defined below. The specific functions, systems, and communications capabilities of that control center depend upon the responsibilities of the PJM Member:

- *Local Control Center* — An entity that participates in the Operating Agreement of PJM Interconnection, L.L.C. (Agreement) and assists PJM in operating and controlling Designated Transmission Facilities establishes a Local Control Center (LCC) to facilitate its responsibilities regarding the security of the PJM RTO.
- *Market Operations Center* — An entity that participates in the Agreement and assists PJM in operating and controlling generation within the PJM RTO establishes a Market Operations Center (MOC) to facilitate its responsibilities regarding the security of the PJM RTO.
- *Load Service Center* — any entity that participates in the Agreement and operates and controls load (but without generation or Designated Transmission Facilities) establishes a Load Service Center (LSC) to facilitate its responsibilities for its load in the PJM RTO. Entities responsible for load that also assist PJM in operating or controlling transmission and/or generation may not need an LSC, as they can discharge these responsibilities from an LCC or MOC.
- *Marketing Center* — a participant in the Agreement as a Power Marketer, Wholesale System User, Other Supplier, or Transmission Customer establishes a Marketing Center to facilitate communications with PJM concerning its participation in the PJM Energy Market.

Many PJM Members are involved in more than one of the four areas of responsibility discussed above. Each member is obligated to be in compliance with the Code of Conduct requirements established in FERC Order 2004. Entities participating in the PJM Energy

Market may establish a separate MOC. All of these four categories of control centers are referred to collectively in this manual as "control centers".

2.2 PJM Member Data Exchange

PJM Members support a variety of PJM functions appropriate to their business requirements and level of participation requirement in PJM. For each of the PJM services described in this section, data is exchanged between PJM and one or more of the categories of PJM Member control centers. The following PJM services are further defined in Attachment A, Information Services Matrix. In this attachment, the references to "Member Type" translate to control center category as follows:

- Regional Transmission Owner — Local Control Center (LCC)
- Generating Entity — Market Operations Center (MOC)
- Load Serving Entity — Load Service Center (LSC)
- Marketer — Marketing Center
- *Generation Scheduling Services* — MOCs input generation, pre-scheduling, scheduling, Synchronized Reserve bids, and regulation bids, and outage data to PJM, and PJM output hourly and daily generation scheduling information to LCCs, MOCs, and LSCs (see the ***PJM Manual for Pre-Scheduling Operations (M-10)*** and the ***PJM Manual for Energy & Ancillary Services Market Operations (M-11)***).
- *EMS Services* — LCCs, MOCs and LSCs input real-time transmission and generation information plus generator regulation and availability data and PJM outputs real-time transmission status, generation status, generation dispatch and regulation signals, and operations & emergency information (see the ***PJM Manual for Balancing Operations (M-12)***).
- Synchrophasor Services – LCCs and MOCs input real-time transmission and generation information (see the ***PJM Manual for Generation Operational Requirement (M-14D)***).
- Transmission Maintenance Planning Services — LCCs input transmission maintenance schedules which are confirmed by PJM to all PJM Members (see the ***PJM Manual for Transmission Operations (M-03)***).
- *Transmission Services* — OASIS is used at LSCs and Marketing Centers to input transmission reservations and by PJM to output Available Transmission Capacity, energy transactions, transmission congestion information, approved transmission reservation requests, and other market information to all categories of control centers (see the ***PJM Manual for Transmission Service Request (M-02)*** and the ***OASIS User Guide***.
- Energy Transaction Services — bilateral energy transactions are input from all categories of control centers and are confirmed by PJM (see the ***PJM Manual for Energy & Ancillary Services Markets Operations (M-11)*** and the ***PJM Manual for Balancing Operations (M-12)***).
- *Long-term Planning Services* — LCCs, MOCs, and LSCs input capacity, load, system characteristics information, generator events, production costs, outage reports and long-term planning information and PJM outputs the results of studies

and assessments to all categories of control centers (see the ***PJM Regional Transmission Planning Process Manuals (14 Series))***

- *PJM Administration Services* — PJM outputs general administrative information and FERC filings to all PJM Members via the PJM Web site.

2.3 Computer System Requirements

Each PJM Member's control center serves as the primary operating link to the PJM control centers and includes computer system hardware and software that supports their responsibilities under the Agreement.

2.3.1 Transmission Monitoring Capability

Transmission Owners shall provide transmission monitoring at their Local Control Centers including monitoring of circuit loading, voltages, limit violations and contingency analysis. Basic software should include State Estimation and Security Analysis functions to monitor actual and contingency conditions. This should include functionality to bring to the attention of operating personnel important deviations in operating conditions.

In the event that PJM's monitoring systems are unavailable, PJM may notify Transmission Owners that they are the sole monitor for their portions of the bulk power transmission system. In that scenario, PJM will communicate the situation via the All-Call. PJM is expecting that the Transmission Owner(s) will use their monitoring systems to (1) assess the reliability of their portions of the bulk power transmission system via contingency analysis and SCADA; (2) communicate any contingency or limit violations on any bulk electric system facility to PJM as soon as possible. If the Transmission Owner determines that corrective actions are necessary to preserve system reliability, then PJM shall approve the corrective action, unless immediate action is necessary. If immediate action is necessary, the TO shall implement the action and report to PJM any actions taken. If the various PJM real time analysis tools are not functioning for the present operating state (possibly because of an EMS outage), PJM shall coordinate with the appropriate Member Transmission Owner to determine if their tools are functioning. If neither the Member Transmission Owner nor the PJM EMS are functioning, then PJM will work with the Transmission Owner to return the system to a known operating condition.

Note: PJM Transmission Owners that own BES facilities and serve load greater than 300 MW must have a real-time analysis package or have their BES facilities be observable within another TO analysis package. Any exceptions to this requirement must be formally approved by PJM.

Should the PJM RTO at any time enter into an unknown operating state due to a catastrophic failure of the ICCP links or loss of EMS analysis tools, it will be considered an Emergency and operations shall be restored to respect proven reliable power system limits within 30 minutes in accordance with NERC standards. PJM relies on Transmission Owners to serve as a back-up to PJM, monitoring BES facilities, when the PJM EMS is inoperable (TOP-007-1). PJM Transmission Owners shall notify PJM dispatch within 15 minutes when their TO analysis packages are unavailable (TOP-004-2 R4).. In general, PJM may be in an unknown state when both PJM and TO analysis packages are unavailable.

The continuous calculation and monitoring of post-contingency voltages for nuclear power plants (for the loss of the nuclear unit) is an important requirement to ensure that adequate voltage is always available for the operation of the nuclear safety systems. Given this requirement, the nuclear power plant(s) shall be notified in cases where the transmission monitoring capability (at PJM and the Transmission Owner) becomes unavailable and the ability to calculate the post-contingency voltages is lost. [There may be situations where the calculations are only being performed at PJM. In this case, loss of the PJM capability shall trigger the notification to the nuclear power plant(s) within 30 minutes.] The notification will go via the All-Call from PJM to the Transmission Owner(s) who will then communicate with the applicable nuclear power plant(s).

System Availability

The computer hardware and software at each control center shall achieve a long-term 99.95% availability level for those reliability functions directly affecting the successful operation of PJM. Any application that supplies operational data to PJM, accepts generation control signals from PJM, or otherwise links to the real-time operational aspects of the PJM control system is considered vital to reliability. Other applications may be considered to be vital to a PJM Member's operations and therefore, shall also achieve 99.95% availability. Redundant hardware configurations with either automatic or rapid manual failover schemes are generally necessary to achieve 99.95% availability.

2.3.2 Data Backup & Archiving

All PJM Members shall prepare and implement a backup and archiving plan which minimizes the loss of vital data upon the occurrence of any hardware failure or a catastrophic system loss.

2.3.3 Computer System Security

Control centers with electronic data links to the PJM computer systems require rigorous computer system security provisions to prevent unauthorized access and unintentional operation. Due to the sensitive nature of both operational and financial data, control center computer systems shall include appropriate techniques such as password log-on for internal users, hardware and software security controls for external users, and on-line virus detection capabilities. Telecommunication circuits connected to any control center computer system shall utilize firewall technology to prevent unauthorized access from external sources.

2.3.4 System Maintenance

Due to the operational requirements and economic benefits of a PJM Member's control center computer system, a computer system (hardware, software, and network) maintenance service arrangement with 24-hour, 7 day/week call-out provisions or on-site staff, is required to ensure appropriate levels of system availability to implement database changes, and to modify user interface displays.

2.3.5 Expansion Capability

PJM Member computer system hardware, software, and network shall be expandable to accommodate growth in their system and operations and to accommodate future changes to the organization and responsibilities of the PJM RTO and the PJM Energy Market. PJM services and marketing activities are all expected to increase and the control center computer systems shall be expandable to accommodate this expected growth. System

design shall provide for orderly addition of computer hardware, software, and network through adherence to accepted system standards and Good Utility Practice.

2.3.6 Data Integrity

PJM maps quality codes sent by member companies into four quality codes:

1. Good (valid data);
2. Manually Substituted by company;
3. Telemetry Failure; and
4. Suspect (usually indicating value is bad).

Details on quality code translations are given in the following documents:

- PJM ICCP Network Interface Control Document, Version 1.1, March 27, 2000.
- PJM ICCP Communications Workbook, Version 1.1, March 27, 2000.
- Running list of updates to the PJM ICCP NICD and Workbook, Version 1.1 January 30, 2001.

Member companies should only send valid quality codes. In particular, companies with front-end data servers should insure that the front-end server does not initiate data transfers with PJM until the front-end server has begun receiving valid and current data from the company EMS or other data source. Sending even a single scan with zero values or other bad data for analog or switch statuses can cause massive alarm generation and improper operation of State Estimator and other vital functions.

PJM provides new members and existing members the testing requirements for system commissioning and on-going support. When commissioning a new system, members should request the latest copy of the *PJM ICCP Testing Requirements* document from PJM. The required tests include:

For new members:

1. Server to server communication verification over PJMNET
2. Exchange of NERC ICCP Association Information Exchange Form
3. Exchange of client and server data points needed before ICCP Association testing
4. Ability to initiate an ICCP Association with PJM
5. Ability to support an ICCP Dual direction Client-Server Association
6. Ability to provide real-time SCADA data during testing along with the ability to change values and quality codes
7. Ability to participate in testing with the designated PJM TEST system
8. Participation in Failover testing to verify required network, server, and communication redundancy

For existing members:

1. All of the above (1 to 8). New members testing requirements

2. The ability to test with the designated PJM TEST system while supporting the real time PJM EMS system
3. The ability to test changes with the PJM designated TEST system before putting the changes in production with the real time PJM EMS system
4. The ability to support Failover testing to verify required network, server, and communications redundancy for existing member changes while still supporting the real time PJM EMS system
5. PJM Member companies are required to successfully complete the PJMNET ICCP Communications Failover Test before going into production with the PJM real time EMS system. The purpose of this test is to verify redundancy from company ICCP servers to PJM ICCP servers. In the process of doing this ICCP server to server Failover testing all network hardware components such as: routers, firewalls, and PJMNET communication lines will have their redundancy validated.
6. In order to accomplish site to site failover between PJM GMS and PJM EMS (depending on member company situation), member company ICCP systems must be able to support up to four IP addresses in their ICCP association start up sequential server hunt list.

2.4 Communications Requirements

Telecommunications (voice and data) circuits, which must be reliable and secure, shall be tested regularly and/or monitored on-line, with special attention given to emergency channels. These communications will include:

- Voice communications between Transmission Owners and neighboring Transmission Owners both internal to and external to PJM.
- Data communications between Transmission Owners and neighboring Transmission Owners both internal to and external to PJM (either directly or through PJM*net*).
- Provisions to monitor communications 24 x7
- Use predetermined communication paths (phone numbers, etc.) to talk to neighboring Transmission Owners internal and external to PJM
- Testing of voice communications with all neighboring Transmission Owners both internal and external to PJM

2.5 Facilities Requirements

This section discusses the control center facility considerations for a PJM Member, including the physical space housing operations staff and, if appropriate, a computer room, communications room, and power supply area. While these considerations apply to all PJM Member categories, the specific implementation of control center facilities considerations shall be appropriate for the nature of the computer systems and communications equipment installed.

2.5.1 Environmental Characteristics

In order to ensure the PJM Member's computer system availability and data reliability discussed in the previous section, its control center facilities shall provide an environment that is suitable for its equipment and personnel during the hottest and coldest outdoor temperatures that can be anticipated.

- The range of control center temperature and humidity shall be controlled appropriately for the installed computer systems and communications equipment. The most restrictive temperature and humidity characteristics of any item of equipment in each room of the control center, the total heat load of that equipment, and the projected growth shall establish the design criteria for the heating, ventilating, and air conditioning systems provided.
- Control room operators, technical staff, and maintenance personnel should be able to function comfortably.
- Where feasible, heating, and air conditioning equipment shall be backed up with redundant or auxiliary systems to allow operations to continue indefinitely following the failure of any single temperature controlling device or motor control center.
- If the control center is located in the proximity of a polluting atmosphere , a positive pressure shall be maintained in the computer room using filtered air to minimize the accumulation of airborne contaminants on the computer system circuit boards and components.

2.5.2 Power Supply & Conditioning

Because of the importance of non-stop operation of the PJM RTO and the sensitivity of computer equipment to minor power disturbances, a stable and secure supply of AC power for the equipment in the control room, computer room, and communications room shall be provided and installed in compliance with current National Electric Code provisions.

- An uninterruptible power supply (UPS) (i.e., battery charger, battery, and inverter) and a backup generator is necessary to supply power to operator display equipment, computer systems and communications equipment. A completely redundant power supply with dual UPS may also be utilized.
- K-rated transformers and oversized neutral conductors shall be employed as necessary to mitigate the effects of harmonic distortion created by non-linear loads.
- The UPS battery shall have sufficient capacity to operate the computer system, and communications equipment until stable emergency generation can be achieved. Periodic maintenance and testing of the battery cells and inter-cell connections shall be performed.
- The backup generator shall be tested periodically under load to ensure its availability under loss of power conditions. Fuel supply for the backup generator should be sufficient for a five-day period. If applicable, redundant backup generators should be considered.
- An emergency lighting system should be provided with adequate battery capacity for several hours.

- The heating, cooling, and ventilation equipment shall also be powered by the backup generator (but not by the UPS).
- A high quality, common earth ground shall be provided, in accordance with IEEE standards, for the computer system and communications equipment to provide a low impedance path for rapid clearing of electrical faults and to reduce electromagnetic interference.
- If UPS power is not provided, TVSS protection for power and communications circuits shall be provided to mitigate the effects of lightning strikes and AC power excursions.
- Where warranted, external power to the control center shall be supplied from two sources, such as two distribution feeders that follow diverse routing from separate electric substations.

2.5.3 Area Access Security

Access to PJM Member control rooms should be restricted. For example, access could be controlled by means of a single entry point monitored by office personnel during business hours and, at other times, either by control room personnel via closed-circuit TV monitors and remotely controlled locks or by a cipher/key/badge-reader lock. Emergency exits/entrances should be sealed and alarmed in conformance with local fire regulations.

2.5.4 Information Flow to Control Room Personnel

A protocol shall be established concerning information transfer from PJM Member staff to the appropriate staff members and their supervisor responsible for coordinating and directing work in the PJM Member's control center. Topics covered shall include the following:

- Inquiries to the shift team and their on-shift supervision.
- Access control to the control room.
- Approvals for Computer outages.
- The PJM shift supervisor and Support Center shall be notified of any computer system outages.
- In case of implementation of PJM Emergency Procedures, all non-essential personnel shall leave the control center and non-essential computer system hardware and software maintenance should be terminated.

2.5.5 Smoke & Fire Protection

Smoke and fire detection equipment shall be installed to detect smoke and fire, warn personnel to hand-extinguish the fire or evacuate the facility, and, where warranted, automatically extinguish the fire. Smoke and fire protection equipment shall conform to the current version of NEC, local, state, and national codes.

2.5.6 Recovery Procedures

In accordance with BAL-005-0, "Automatic Generation Control," PJM, as the Balancing Authority, provides adequate and reliable backup power supplies and performs weekly tests (system conditions permitting) at both control center locations to ensure continuous

operation of AGC and vital data recording equipment during loss of the normal power supply.

The AGC program is monitored by a function called the “Multi-Computer System (MCS) function.” This function monitors all vital EMS programs, including AGC, and initiates a failover to the backup server if a problem is detected with the application. Data links to each member company are also monitored such that any interruption in data feed is indicated via alarm messages and an indicator on the main menu and by individual quality codes on all data affected by the link outage. In addition, the generation dispatcher has graphic presentations of ACE and other AGC data in front of them at all times so any interruption in the program or its calculations are readily apparent as a flat-line on the graphs.

PJM Members shall comply with PJM recovery procedures. For PJM Members that interface with the PJM EMS, all the necessary backup voice and data circuits must be provided between the Local Control Center and PJM. Generation owners should design their generation control systems with the capability to accept alternate control inputs from PJM AGC systems (i.e. AC1, AC2, and GMS) including manual operation as directed by PJM operations personnel.

Each Member TO must have a plan for loss of control center functionality that includes procedures and responsibilities for providing annual training to ensure that operating personnel are able to implement the plans.

All PJM Members shall develop a backup recovery plan to cover various contingencies, including maintaining an off-site storage location for updated copies of all software and data files necessary to restore control center functions. The backup recovery plan is subject to review by PJM.

PJM systems provide multiple levels of redundancy in order to mitigate various levels of Control Center functionality degradation. This redundancy and the associated Business Continuity Plans developed by PJM ensure that PJM can meet its responsibilities under the PJM Operating Agreements as well as NERC standards. The following descriptive material provides a high level view of key areas included in the Business Continuity Plan and in detailed PJM operating procedures.

Portions of the PJM Control Center capability are housed in diverse physical locations. The PJM campus in Valley Forge, PA houses one control center and a second control center is located in Milford Township, PA. Each control center has access to the both AC1 and AC2 EMS’s and maintains redundant communications capability for data and voice. Generation Control: PJM is capable of calculating Area Control Error (ACE) via AC1, AC2 or the GMS. AC1 and AC2 are physically located at different sites to increase redundancy. The PJM Operator has the ability within each tool to select alternative tie sources to correct for poor data quality.

PJM Actions:

- PJM Dispatcher verifies accuracy of ACE calculation.
- PJM Dispatcher controls to appropriate ACE by manually correcting any inaccurate data inputs.
- PJM Dispatcher notifies support personnel of data quality issue.

- PJM Dispatcher switches to alternative system in the event of a widespread data quality issue.
- PJM returns to normal operations when data/ACE calculation issues are resolved.

Transmission Analysis: PJM is capable of performing transmission analysis via either Primary EMS.). System Operators have the ability to switchbetween EMS's in real time. Testing is scheduled on a weekly basis. Transmission Owners are responsible to monitor/control their transmission system in the event that both PJM primary EMS's are unavailable.

PJM Actions:

- PJM Dispatcher verifies the accuracy of the Network Applications (NA) results.
- PJM Dispatcher attempts to resolve inaccurate NA results by troubleshooting data inputs and manually over riding incorrect device statuses, tuning parameters, etc.
- PJM Dispatcher notifies support personnel of issue.
- If appropriate, PJM Dispatcher switches to alternateEMS.
- PJM Dispatcher notifies companies via the All–Call of NA status.
- PJM Dispatch notifies Transmission Owners and external systems via RCIS if unable to monitor system via alternateEMS.
- PJM returns to normal operations when appropriate.

Data Integrity: PJM is capable of failing ICCP links from AC1 to AC2 communication servers. System Operators have the ability to switchservers in real time. Testing is scheduled on a weekly basis.

PJM Actions:

- PJM Dispatcher verifies the accuracy/status of the data links.
- PJM Dispatcher notifies support personnel of data quality issue.
- PJM Dispatcher, if appropriate, will switchservers in real time on p EMS's.
- PJM Dispatcher, if appropriate, will switch EMS's if communication problems exist on both primary and stand by communication servers on either EMS.

Voice communication: Voice communications are available from either control room. Within each site there are multiple levels of redundancy, including dedicated ring-downs, manual dial, business voice systems, cellular, satellite, all-call and facsimile communications. Testing is conducted on a periodic basis.

PJM Actions:

- PJM Dispatcher will utilize the appropriate phone system, based on availability, following this hierarchy: British Telecom (BT), Tradenet, office phone, cell, satellite.

These plans and procedures for maintaining PJM Control Center functionality are integrated into the PJM Business Continuity Plan. Periodic training on the plan elements and specific actions required by System Operators is included in PJM's normal operating training curriculum. The Business Continuity Plan is tested on a semi-annual basis via drills and procedural exercises. System Operators are responsible for conducting the periodic tests,

participating in the Business Continuity Exercise and participating in debriefing activities designed to identify and implement improvements to the overall process. Detailed operating procedures are documented in the Business Continuity Plan.

2.5.7 Disclosure of EMS Data to Transmission Owners

PJM will implement a technical solution to provide Transmission Owners with read-only access to PJM's EMS system. In order to ensure that this solution is implemented in a secure, protected manner, members are required to implement the following:

- Procedural controls to ensure that this information is viewed only from a location within the member's control center.
- Provide PJM's Network Infrastructure department configuration information needed for establishing and authenticating connections.
- Limit access to the workstation utilized in viewing PJM's EMS screen to those with authorized access to the member's control center.
- Share credentials for this access only with individuals who have authorized access to the member's control center. This should be documented in accordance with the member's controls for CIP 004 R4.
- Report to PJM immediately any incidents leading to loss, theft or destruction of the authentication devices.
- Data Security: Protect the information displayed in accordance with PJM's OA section 18.17, as well as member's own policies, standards and procedures.
- PJM may request evidence for any or all of these steps during PJM's TO Audit.

2.6 Control Center Staffing

PJM Member control centers must be staffed with competent personnel trained (reference PJM Manual 40) for all normal and emergency situations that might be anticipated. Control room operator staffing levels should be prudently determined based upon the impact of the PJM Member's operations. Possibilities for control room staffing include combinations of the following:

- One or more operators in the control room 24 hours a day, 7 days a week
- One or more operators in the control room during business hours or hours of operation
- Responsible personnel not in the control room but able to be contacted by the PJM dispatcher within one minute

While staffing guidelines cannot cover all situations, the following general guidelines may be useful:

- Transmission Owners, Generation Owners, and other Load Serving Entities that participate in the operation and security of the PJM RTO and/or that must respond to generation adjustment or load shedding during normal or emergency conditions must staff their control center 24 hours a day, 7 days a week, with 100% availability of staff.

- Owners of generation which operates infrequently may require continuous control center staffing only during the hours of their units' operation. They must be able to answer telephone questions and directions within one minute of a call initiation by PJM.
- Market Participants must be able to respond to telephone questions about their scheduled transactions within one minute of a call initiation by PJM.

2.6.1 Staffing Upon Loss of an EMS or a 765 kV, 500 kV, or 345 kV RTU

If a PJM Member's EMS becomes unavailable, some PJM Members move their dispatchers to a backup control center while others send staff to man their vital operational facilities. PJM Members should continue to stay in contact with and provide as much information as possible to PJM. If an EHV substation RTU becomes unavailable, the respective Transmission Owner may be required to send staff to that substation to telephone information to the LCC and to PJM.

2.7 PJM Member Back Up Capability Required to Support PJM in its TOP Role

If a PJM member primary EMS capability becomes unavailable, PJM will need back up capability (may include backup EMS or backup functionality or staffing critical substations, etc.) from the Transmission Owner to be available (within 1 hour) from that member so that PJM can continue to perform its obligations as the TOP during such interruptions. Specifically, PJM requires the following from the PJM members during the loss of the transmission owner EMS:

- NERC Standard TOP-004, R1 requires the TOP to operate within the limits of its IROLs and SOLs. If the data for monitoring the IROLs and SOLs passes through the PJM member EMS and that capability becomes lost, then the PJM member is required to have a backup capability to ensure that the necessary data continues to be provided to PJM.
    - During the TO transition to its back up facility, PJM will continue to monitor the TO Transmission System to the extent data quality permits.
- NERC Standard TOP-004, R6 requires the TOP to have formal policies and procedures to ensure transmission reliability. If the PJM member is unable to execute operating procedures that may be implemented by PJM, such as switching or load shedding, due to the unavailability of its EMS or other operational tools, then the PJM member is required to have a backup capability to be able to execute these actions.
- NERC Standard TOP-006, R1, R2, R5-7, requires data to be provided to PJM to ensure reliability. If such data is interrupted by unavailability of the PJM member EMS, then the PJM member is required to have a backup capability to ensure that the necessary data continues to be provided to PJM.
- NERC Standard TOP-008, R1-4 requires PJM to take immediate action to mitigate potential and actual IROL or SOL violations. Many of those actions require the PJM member to execute actions requested by PJM. If the unavailability of the PJM member EMS or other tools prevents the execution of those actions, then the PJM

member is required to have back up capability to ensure that it can execute PJM-requested actions.

Section 3: Data Exchange Requirements

Welcome to the *Communications & Data Exchange Requirements* section of the PJM Manual for *Control Center Requirements*. In this section you will find the following information:

- Data exchanges with new PJM Members (see "*Introduction*").
- Data exchanged between PJM and PJM Member's EMS systems (see "*Energy Management System (EMS) Data Exchange*").
- Data exchanged between PJM and PJM Member's Synchrophasor systems.
- Information available to Market Participants (see "*OASIS Information Exchange*").
- Data exchanged over telephone and facsimile machines (see "*Dispatch Voice and Facsimile Communications*").
- Usage of backup communications systems (see "*Alternative Voice Communications*").
- Requirement to support both PJM dispatch centers (see "*EMS* ").

3.1 Introduction

Communications between PJM Members and PJM depend upon a combination of electronic data, dispatch and business voice links, facsimile, Internet communications (e.g., to OASIS), and floppy disk and paper reports sent by courier or US mail.

- PJM Members (and PJM) may require additional time after signing the Operating Agreement to establish electronic data links.
- PJM Members with real-time data to be exchanged with PJM and with a significant participation in the supply of information to the PJM RTO require electronic communications via the EMS and eSuite data exchanges.
- New PJM Members with a small amount of data to be exchanged and that do not require real-time links to PJM should use facsimile and voice communications for their PJM communications.
- New PJM Members already communicating with PJM through another PJM Member's electronic communications systems should arrange to continue using those communications systems where this is feasible; separate electronic communications links can be planned and installed subsequently if necessary.

3.2 Energy Management System (EMS) Data Exchange

Energy Management System (EMS) information is exchanged between PJM EMS computers and the EMS systems of PJM Members primarily to support real-time functions such as PJM RTO network monitoring, generation control, and security analysis as well as non-real time functions, such as generation scheduling, accounting information, messages, and reports. The information exchange occurs periodically, by exception, and upon demand.

3.2.1 EMS Communications System

PJM and PJM Members exchange EMS information between their respective EMS computer systems via PJMnet, which is a dual redundant MPLS (Multiprotocol Label Switching) network using the Inter-control Center Communications Protocol (ICCP).

3.2.2 PJM EMS Communication Protocols

The EMS utilizes a communication protocol based on the Inter-control Center Communications Protocol (ICCP) standard. PJM supports block 1 (scanned data), block 2 (exception data) and block 4 (messages) of this protocol. PJM requires that members support blocks 1 and 2.

ICCP is a comprehensive, international standard for real-time data exchange within the electric power utility industry. It is intended to support inter-utility real-time data exchange which is vital to the operation of interconnected systems.

A detailed description of the format and content of the ICCP Conformance Blocks as adapted to PJM needs may be found in the following documents:

- PJM ICCP Network Interface Control Document (NICD) Version 1.1, dated March 27, 2000.
- PJM ICCP Communications Workbook Version 1.1, dated March 27, 2000.
- Running list of updates to the PJM ICCP NICD and Workbook, Version 1.1, January 30, 2001.

The appropriate documents will be supplied to applicant PJM Members to describe data types and message structures and to supply detailed information on network protocol and line discipline.

3.2.3 EMS Data Exchange

EMS data is exchanged between each PJM Member's EMS and the PJM EMS computer system periodically on one of several fixed cycles, as well as on demand, by exception, and interactively.

- The EMS data sent cyclically from PJM Members to PJM includes the following types of information sent with associated data quality codes:
    - data needed for the PJM control programs
    - data needed for monitoring generation
    - data needed for monitoring transmission
    - data needed for monitoring interchange

- The EMS data sent cyclically from the existing PJM EMS to each PJM Member's EMS includes the following types of information:
  - System control data
  - Generation and transmission information required for monitoring and security analysis programs
  - Area Regulation data
- Cyclic data exchanged at the fast scan rate (i.e., two seconds) is used to develop the PJM Area Control Error (ACE) and associated individual PJM Member Area Regulation megawatt values. Cyclic data exchanged at a slower scan rate (i.e., every ten seconds) is used to develop dispatch control values, security monitoring, and data tracking.
- Cyclic data may also be sent hourly from PJM Members which define the accumulated energy values.
- PJM Members are responsible for the accuracy of the data they send to PJM. A maximum of 2% overall inaccuracy in the repeatability of data from transducers or potential transformers/current transformers (PTs/CTs) is allowed for instantaneous monitored values (see Section 5, Meter Accuracy Standards). Hourly MWh readings data must be provided to PJM daily to ensure accurate billing. Regular calibration of PJM Member metering is necessary to keep the data as accurate as possible (see Section 4, Billing Metering Standards).
- Data exchanged either by exception, on demand, or interactively between PJM Member's and the PJM EMS systems include the following:
  - Breaker, disconnect, and line status changes, with associated data quality code information (integrity scans for exception data shall be at 30 minute intervals)
  - Emergency messages in text format

Each PJM Member is responsible for determining data quality indicators for all data transmitted to PJM. Both failed individual values and any value calculated using a failed point must be flagged. At times, state estimated values may suffice for an interim period. However, when a point fails for an extended period, a manual update of the point's value is necessary to keep the data as accurate as possible.

PJM member systems will report to PJM the outage of any equipment which handles telemeter 345 kV or higher and tie data sent to PJM. This equipment includes remote terminal units (RTU), data links, etc., which telemeter 345 kV and higher voltage facilities and tie line values, megawatt flows, megavar flows, and voltage. Scheduled outages should be reported one day in advance, and again prior to switching the equipment out of service. The loss of any of this equipment should be reported immediately after such an occurrence. The PJM control room should be notified when the outaged equipment is returned to service.

When data communication outages occur, the following data must be kept manually (or electronically should manually prove impractical) updated:

- Megawatt line flows for 345 kV or higher lines and all tie lines. If megawatt values cannot be given, provide the best data available, i.e. MVA, state estimated data, etc.

- Bus voltages for all 345 kV or higher stations.

Affected data must be updated:

- After the loss of a major generator or transmission line;
- When the data value has a detected change of more than 100 MW on a 500 kV or higher line, or more than 50 MW on a 345 kV and below;
- At least every 30 minutes, and more frequently as determined by PJM.
- Whenever changes occur, 500/345/230 kV tap changes and 345 kV or higher breaker positions should be manually updated. MVAR values for the 345 kV or higher lines will be updated only when requested by PJM.

3.2.4 PJMnet Communications System

PJMnet is a dual-redundant MPLS network that PJM utilizes as the primary wide-area network for communicating Control Center data to and from PJM. PJMnet will support:

- Inter-Control Center Communications Protocol (ICCP) data links to Control Centers.
- SCADA links to plants via remote terminal units (RTUs) using Distributed Network Protocol (DNP).

PJMnet connects member Local Control Centers (LLCs), Market Operations Centers (MOCs) and generating plants to PJM's Control Centers. The number of physical interfaces and their capacity will be determined by the impact of your facilities on overall PJM Operations. LCCs, MOCs and generating plants are expected to install metering and use their own EMS/GMS/SCADA or equivalent system to collect data. PJM will provide PJMnet network connections and router(s) at the member company location.

All Transmission Control Centers used for PJM controlled transmission facilities will receive a redundant PJMNet connection with optional additional circuit(s) to their disaster recovery location(s).

Availability and qualification for other links is described in Exhibit 3: Guidelines for Metering Installation of Manual 14-D.

(http://www.pjm.com/documents/~/media/documents/manuals/m14d.ashx)

Exhibit 5 in Manual 14D (***http://www.pjm.com/documents/~/media/documents/manuals/m14d.ashx***) shows the types of equipment necessary for exchanging generation data with PJM.

PJM will supply a PJMnet connection to LCCs and generation sites per customer eligibility as indicated in manual 14D. This will include installation of the frame relay connections (local loop, PVC's, etc.) and routers as well as ongoing Network Operations Support and maintenance of the PJMnet components. If dual circuits are provided, PJM will route them as diverse from each other as practicable within the existing infrastructure. Installation will be completed within 90 calendar days of the completion of the site survey contingent upon timely completion of the member supplied items. The member company will be responsible for the following:

- AC power within five (5) feet of equipment site.
- Power outlet(s) will be quad box outlet on a separate breaker for each router.

- Adequate cooling.
- Mounting location for PJMnet router and modem equipment.
- An environment clean and free from excessive dust or debris, dry (5 to 95% humidity, non-condensing), of moderate temperature (32 to 104 degrees F), well-ventilated and well-illuminated.
- Adequate station ground.
- Dial up modem lines for out of band router access by NOC.
- Return of the "Welcome Letter" either agreeing to PJM assigned IP address scheme or providing specific member requirements in this area.

By utilizing the PJMnet Communications system, member company agrees to abide by all terms and conditions contained in the User Agreements governing such utilization, as updated from time to time located at the following links:

- For Qualified Connection provided pursuant to Schedule 9 of the Tariff (No fee assessed) – http://pjm.com/media/about-pjm/member-services/membership-assistant/pjmnet-network-connection-limited-use-agreement-no-fee.pdf
- For Purchased Connection provided pursuant to Schedule 11 of the Tariff (Fee assessed) – http://pjm.com/media/about-pjm/member-services/membership-assistant/pjmnet-network-connection-limited-use-agreement.pdf

3.3 Synchrophasor System Data Exchange

Synchrophasor System information is exchanged between the PJM Synchrophasor System and the Synchrophasor System of PJM members as well as other RTOs and ISOs to support real-time and off-line functions such as voltage stability monitoring, oscillation monitoring and detection, situational awareness, the archival system, modal analysis, and a Wide Area View.

3.3.1 Synchrophasor Network

PJM and PJM Members exchange phasor information between their respective Synchrophasor systems via high-speed real-time data acquisition network. PJM will support:

- Dedicated dual-redundant high speed network (Phasornet) from member's center phasor data concentrator (PDC) to PJM super phasor data concentrator (SPDC) using the Protocol specified in standard C37.118.
- Dual-redundant MPLS (Multiprotocol Label Switching) network (PJMnet) from MOC / generating station PDC / PMU via ICCP data link or SCADA link to PJM SPDC.

PJM Synchrophasor communication system connects member Local Control Centers (LLCs), Market Operations Centers (MOCs) and generating plants to PJM's Synchrophasor System. The number of physical interfaces and their capacity will be determined by the impact of your facilities on overall PJM Operations. LCCs, MOCs and generating stations are expected to install phasor measurement unit(s)and use their own Synchrophasor system to collect data. PJM will provide either Phasornet or PJMnet network connections and router(s) at the member company location as appropriate to the application.

PJM's and member company's responsibilities for the initial establishment and on-going maintenance of the Synchrophasor communication system are as similar as to EMS communication system which is specified in Manual 01 section 3.2.4.

3.3.2 Synchrophasor Data Exchange

Phasor data is exchanged between each PJM Member's Synchrophasor System and the PJM Synchrophasor System continuously at 30 samples per second rate.

- The phasor data sent continuously from PJM Members to PJM includes the following types of information sent with associated data quality codes:
  - data needed for monitoring generation (Refer to M14D section 4.3.4)
  - data needed for monitoring transmission (This includes system frequency, positive sequence current and voltage)
- PJM Members are responsible for the accuracy of the data they send to PJM. A maximum of 0.2% (or as defined by Phasor Data Quality Task Force) overall inaccuracy or loss of data from members to PJM storage devices and user-level applications at PJM is allowed for instantaneous monitored values.
- All data items, regardless of type, are collected and disseminated at a frequency of 30 frames per second and should be sent to PJM with associated data quality codes in compliance with IEEE C37.118 communication standards.

PJM member systems will report to PJM the outage of any data communication equipment connecting the facility to PJM Synchrophasor system to the following email address: phasoroutage@pjm.com. This equipment includes phasor measurement device, PDC, data links, etc. Scheduled outages should be reported one day in advance, and again prior to switching the equipment out of service. The loss of any of this equipment should be reported immediately after such an occurrence. The PJM control room should be notified when the in-outage equipment is returned to service.

To support the recovery of PMU data, the member shall support the storage of PMU data locally to support recovery of that data for PJM.

3.4 OASIS Information Exchange

PJM is responsible for providing the Open Access Same-time Information System (OASIS) for PJM RTO Transmission Providers and Customers (see the ***OASIS User Guide***). The information on the OASIS network includes Available Transfer Capability and other important transmission and ancillary services data. Market Participants are responsible for establishing Market Operations Centers which implement the necessary communications with OASIS.

3.4.1 Transmission Customer Communications

Transmission Customers use the public Internet to access PJM OASIS. OASIS Customers must register with PJM before they access the PJM OASIS system and login each time a connection is established. The primary interface to request transmission or ancillary service and to provide information to PJM OASIS is on-line data entry forms available on the OASIS display pages. These forms are used to request the purchase of services and to offer products for sale, as well as to post other transmission-related information. Instructions on how to interface with OASIS are available on the OASIS display pages or from the PJM

OASIS Account Administrator. If a Transmission Customer enhanced OASIS connections, a direct connection is available, at additional cost.

3.4.2 Transmission Provider Communications

Transmission Providers may connect to the PJM OASIS system via the Internet and it is possible for them to use SQL*NET protocol and ORACLE Forms user interface software to display and post information to the OASIS. ORACLE Forms are used to post and modify data, approve purchase requests, offer products for sale, and post “Want” ads. PJM is responsible for administering and posting information associated with the provision of transmission service as required by FERC.

3.5 EMS Backup Communications

PJM utilizes two systems (AC1 and AC2) for PJM EMS control information as backups for one another. PJM requires all ICCP members to send identical sets of data to both systems by use of two ICCP Links. Members may also use these links to receive identical PJM ICCP data from both systems, or utilize a third ICCP Links that will be used to receive data from PJM. This third link must have the ability to connect to AC1 and AC2 to receive data.

PJM Transmission Owners with Ties to transmission systems external to PJM will provide tie information to the PJM GMS system as a backup to the PJM AC1 and AC2 systems.

3.6 Real-Time Analysis Monitoring Requirements for System Security

PJM analyzes the system security of the PJM system using information telemetered from PJM Members. Phase and line-end location of metering is as mutually agreed between the two connected systems, must be consistent with established system metering, and must be coordinated with PJM. The following analog and status information is required for this analysis:

- Required Analog Data:
  - Voltages for buses at 34 kV and above (or 69 kV and above, if lower voltage equipment is not monitored), MW and MVAR values for generating units greater than 1 MW including steam, nuclear, hydro and combustion turbine units and non-utility generator units (usually individual unit generation but total station generation may be telemetered in special circumstances) if connected directly to the transmission system.
  - MW and MVAR values (both ends) for designated transmission lines at 69 kV and above (if single-phase metering is employed, the B-phase is preferred)
  - Transformer phase angle regulator (PAR) tap positions for modeled and controlled transformers (high side metering or low side with a loss calculation)
  - MVAR values for synchronous condensers
  - MVAR injection on 34 kV buses (or 69 kV if lower voltage equipment is not monitored)

  - Load Tap Changing (LTC) transformers tap position for transmission transformers with a rated low-side voltage of 100kV or greater and the ability to change taps while energized and loaded.
  - Load Tap Changing (LTC) transformers tap position for Generator Step-Up (GSU) transformers with a rated high-side voltage of 100kV or greater and the ability to change taps while energized and loaded.
  - Selected station frequencies
  - Frequency of Acquisition — ≤10 seconds
- Required Status Data:
  - Circuit breaker status for each modeled facility at 69 kV and above
  - Breaker and disconnect statuses as modeled
  - Frequency of Acquisition — Upon change of status.

PJM Members have the capability to validate data and send accurate manually adjusted data until inaccurate metering is corrected if state estimated data will not suffice. In case of a computer failure or outage, all data should be sent once the computer reinitializes. See the *PJM Manual for* ***Transmission Operations*** *(M-03)* for more information.

3.7 Dispatching Requirements

The following requirements are intended to assure reliable dispatch and operation of the PJM system:

- All tie line MW and MWH data are telemetered to PJM and the neighboring Control Area and emanate from a common agreed upon terminal using common primary metering equipment. Daily billing MWH data can be submitted via Power Meter.
- Tie-line MWH metering is not submitted on an hourly basis per NERC Standard BAL-005-0, however, this data is submitted on a daily basis via Power Meter. PJM Dispatch utilizes an EMS alarming process to compare State Estimator data to tie-line telemetry in order to detect data accuracy issues on a more frequent basis than hourly intervals.
- Combustion turbines supply accurate real-time status information and report failure-to-start situations.
- 500 kV and significant 345 kV and 230 kV locations require disturbance recording equipment for post-disturbance analysis. These devices should have the capability to retain historical data for future analysis.
- PJM Members participate in the payback of the accumulation of inadvertent interchange as directed by PJM.
- The amount of generator regulating capacity reported to PJM is accurate and committed to the system.
- The amount of generator reserve capacity reported to PJM is accurate and committed to the system.

PJM Members, generating stations, and fault recorders are time synchronized to assure accurate recording times for system events.

Section 4: Voice Communications

4.1 Dispatch Voice & Facsimile Communications

The dispatch voice system provides high-priority voice communications between PJM and various PJM Members, as described below. The dispatch voice system hardware consists of the All Call system, Ring Down circuits, and manual dial circuits. Equipment at PJM includes a British Telecom (BT)) / BT digital switch and a Nortel Meridian PBX. Access and interfacing to the communications service providers is configured so that either switch can operate in stand-alone mode, but economy and performance are optimized when they are operating together.

Communications via facsimile machines is another redundant means of exchanging information between PJM operations, accounting, and planning personnel and all categories of PJM Members.

PJM and PJM Members shall use English as the language for all communications between them and shall issue directives in a clear, concise, and definitive manner. These communications shall ensure the recipient of the PJM Directive repeats the information back correctly and the initiator shall acknowledge the response as correct or repeat the original statement to resolve any misunderstandings (i.e., 3-Part Communications) per NERC COM Standards.

4.1.1 All Call System

The All Call system is used by PJM operators to contact Local Control Centers (LCCs), Market Operations Centers (MOCs), and Load Serving Centers (LSCs), either individually or simultaneously for information exchange under both normal and emergency situations. The All Call is based on the Dialogic Communications Corp. Communicator, an emergency notification system that provides PJM system operators the ability to broadcast voice, text or fax messages. The All Call operates over PSTN (Public Switched Telephone Network). The system is capable of sending messages to 72 numbers simultaneously. If the more than 72 locations must be contacted the system will dial the additional numbers as lines become available. Continuous retry logic ensures 100% of the facilities are contacted by cycling through primary, secondary, and tertiary numbers until positive confirmation of message receipt. Both real-time displays and reports of response status are available to PJM System Operators.

Each control facility is required to have a dedicated PSTN line for the primary All Call number. Secondary and tertiary do not have to be dedicated to the All Call System; they may be PBX or cellular, not pager. Acknowledgement of message receipt by each participant is required. Logs of responses and response times are provided to PJM's Performance Compliance department for analysis.

4.1.2 Ring Down Circuits

Private Lines with automatic ringing (PLAR) or dual central office (DCO) lines are used to provide Ring Down or simulated Ring Down capability to LCCs, some Market Operations Centers (MOCs), and Load Service Centers (LSCs). These circuits provide virtually instantaneous point to point access between PJM and PJM Members.

4.1.3 Manual Dial

In addition to private line capability, the PJM BT switch also interfaces with both the PJM Meridian PBX and Central Office (CO) Lines to provide manual dial capability to all categories of PJM Members via the Public Switch Telephone Network (PSTN). Manual dial serves as backup to the Ring Down system in case that system fails.

4.1.4 Facsimile Communications

Facsimile communications is widely used in the PJM Control Center to communicate with all PJM Members. Facsimile machines support energy marketing, energy scheduling, unit scheduling, accounting, dispatch operations, and system restoration. These facsimile machines are connected to either the PJM Nortel Meridian PBX or CO Lines.

4.2 Alternative Voice Communications

The dispatch voice system (All Call, Ring Down, and manual dial PBX) is designed to provide voice communications during normal circumstances. Should the PJM primary All Call System, Ring Down, Manual Dial, and Facsimile Communication fail, the following systems provide alternative communication capabilities in the event the normal system is not effective for some reason:

4.2.1 Business Voice System

Each dispatch position is provided with a standalone phone set, configured with speed dial using CO Lines, which serve as a backup for the PJM BT switch to provide communication between the PJM control center and all PJM Members in the event of BT switch failure.

4.2.2 Cellular Telephones

Cellular telephones are used by PJM dispatchers as an alternate method of voice communication. Cellular phones can be used to coordinate activities while physically moving personnel to the PJM emergency dispatch center.

4.2.3 Satellite Telephones

Satellite telephones are used by PJM dispatchers as an alternate method of voice communication. These telephones are used to protect against loss of common carrier services.

Transmission Owners shall have satellite phone capabilities at both their primary and back-up facilities. Satellite phones are required for all Generation Operator (GO) control centers which control one or more units totaling 500 MW or greater.

Functional Requirements for Satellite Phones:

- Compatible with PJM satellite network
- Ability to receive dedicated all-call
- Ability to bypass the ground phone (PSTN) network

Additional Notes:

- If the emergency plan for a generator control center is to co-locate with a transmission control center which has a satellite phone, this will meet the

requirement, however, companies need to examine the availability of these systems for both transmission and generator communications during an emergency.

- Companies need to also provide similar (radio, satellite, etc.) redundant communications from their control centers to their plants.
- PJM may also require specific vital generation units to maintain a satellite phone.

4.2.4 Three Part Communications

NOTE: This section 4.2.4 will be removed upon the effective date of COM-002-4 which is pending FERC approval. Operators should utilize the Communication Protocols outlined in Section 4.3. Section 4.3 will replace Section 4.2.4 upon the effective date of COM-002-4.

All operators should use their name and company name when answering a phone call. This will ensure that the caller has the correct party prior to communication beginning.

PJM system operators and member transmission and generation operators should always practice three-part communications to avoid errors and miscommunications.

Three-part communications consists of the sender delivering the message to the receiver. The receiver repeating back the information to the sender while questioning for clarification. The original sender will confirm if the receiver has the message correct.

Three-part communications is required when the operators are exchanging important operational information. A partial list of these situations is presented below. If there is a question about whether the situation warrants the use of three-part communication, it should be used.

Examples of generation operations utilizing three-part communications:

- Unit starts
- Unit trips or releases
- Requests from PJM for additional generation
- Outages (eDART ticket numbers and unit designations)
- Synchronized Reserve or Regulation assignments
- Manual dispatch of generation
- Emergency operations related information

Examples of transmission operations utilizing three-part communications:

- Transmission switching
- Capacitor switching
- Outages (eDART ticket number and line numbers, not every circuit breaker)
- PCLLRW issuance and cancellation
- TLR curtailments in transactions
- Market to Market redispatch
- Emergency operations related information

In addition, it would be expected that anytime information is exchanged that is not thoroughly understood (whether it be due to speech impediment, accent, or because information was not clearly articulated, etc.), a repeat back should be requested and followed up on, constituting three-part communications. The use of the term "directive" should be used if additional clarification is needed – either by the issuer or the receiver of the critical communication.

In order to facilitate the clear communication of Transmission Operations instructions to field personnel, there is also a requirement for Transmission Owner operators to use three-part communications to communicate switching instructions associated with BES facilities.

PJM All call messages do NOT require repeating as the receiver can repeat the message via telephone keypad selection. It is the responsibility of any party receiving information via an all call to follow up with the initiator of the information if there is not a clear understanding of the message. PJM receives confirmation of member confirmation through electronic means and will follow-up with individual companies if appropriate.

PJM also performs communication audits of operator conversations to ensure that three-part communication is being consistently utilized.

In addition, it is possible for PJM to issue directives in each of its operational roles (as the RC, TOP, or BA). PJM Directives are defined as instructions from PJM to its members to take actions to control Inter Regional Operating Limits (IROL) or initiate load dump measures for capacity or transmission emergencies as described in PJM Manual 13, Section 2 and Section 5. These Directives could be issued through a PJM All Call or through direct voice communications to the applicable member companies. The following are examples of communications which could be considered Directives by PJM (PJM Directives require 3 part communication):

- PJM as Reliability Coordinator:
  - Direct actions to implement load dump plans to control IROLs
- PJM as Transmission Operator:
  - Directing Generation to manually lower or increase unit output outside of automated dispatch signals to control IROLs
  - Directing selected generation to trip off-line to control IROLs
  - Direct actions to implement load dump plans for the purposes of transmission control
- PJM as Balancing Authority:
  - Directing Generation to deploy synchronous reserves to restore DCS after a unit trip to control an IROL
  - Direct actions to implement load dump plans to rectify capacity deficiencies.
- All operators must be cognizant of the time constraints associated with system operations such as limits over emergency ratings, load dumps, IROLs, DCS events, etc. It will often be necessary to quickly confirm status, ratings, output, options, etc. prior to initiating the directive or operational instruction. Once this is complete, the PJM operator will initiate the instruction by:
  - Restating the desired action

- Receiving and or requesting the repeat back by the receiver
- Acknowledging the correct repeat back
- From this point on, the receiving operator should be focused on implementing the directed actions.

NOTE: PJM members are obligated to follow all operational instructions or Directives as described in the PJM Operating Agreement, NERC Standards and PJM Manuals. If a PJM member is unable to comply with PJM instructions, the member should notify PJM of the restriction (based on safety, loss of life, or damage to equipment) so PJM is able to implement other actions to alleviate the operation problems.

4.3 PJM Communication Protocol

4.3.1 Purpose

PJM has developed these Communication Protocols in accordance with NERC Standard COM-002-4. The purpose of these protocols is to improve communications for the issuance of Operating Instructions to reduce the possibility of miscommunication that could lead to action or inaction harmful to the reliability of the Bulk Electric System (BES).

4.3.2 Applicability

These protocols apply to all PJM operators and operators at member companies that issue and/or receive Operating Instructions.

4.3.3 Definitions

Operating Instruction – A command by operating personnel responsible for the Real-time operation of the interconnected Bulk Electric System to change or preserve the state, status, output, or input of an Element of the Bulk Electric System or Facility of the Bulk Electric System.

Note: A discussion of general information and of potential options or alternatives to resolve Bulk Electric System operating concerns is not a command and is not considered an Operating Instruction.

Examples of Operating Instructions (not all-inclusive):

- Ordering transmission equipment in or out of service
- Load shed instructions
- Ordering generation MW/MVAR output changes
- Ordering generation online or offline (either in real time or scheduled in advance)

Examples of communications not considered Operating Instructions (not all-inclusive):

- Confirmation of ratings or power flows
- Discussions of operational options
- Discussions of generator status or availability

Three Part Communication – Verbal communication process between an issuer and receiver whereby:

1. Issuer clearly delivers the message
2. Receiver repeats (not necessarily verbatim) the message OR
   - requests the issuer to reissue the message
3. Issuer confirms the receiver's response if the repeated message was correct OR
   - reissues the message if the repeated information was incorrect or if requested by the receiver OR
   - takes an alternative action if a response is not received or if the message was not understood by the receiver.

Note: It is the issuer's responsibility to ensure the key components of the message were repeated correctly.

All-Call – Verbal message delivered to PJM members via a one-way single party to multiple parties burst messaging system.

4.3.4 Communication Protocols

1. All operators should use their last name (at a minimum) and company name when answering a phone call and identify themselves using their last name (at a minimum) and company when initiating a phone call.
2. All operators shall issue and receive written and oral Operating Instructions using the English language.
3. All operators shall issue and receive Operating Instructions using Three Part Communication (as defined above) during both normal and emergency operations.
4. PJM shall confirm or verify that an Operating Instruction was received by at least one party when delivering the Operating Instruction via the All-Call system.

Note: PJM Members can acknowledge receipt and understanding of All-Call messages by pressing two on the telephone keypad.

Note: PJM operators can verify receipt of All-Call by recipients on the All-Call system and via an email report from the All-Call system.

Note: When delivering All-Call messages, PJM operators will announce, their name (or position) and the type and number of messages at the start of the All-Call. The All-Call will be concluded with the operators name (or position) and "That is all".

5. For Operating Instructions that are issued with a time reference, the time identification shall be in 24 hour format. For Operating Instructions to entities in different time zones, the appropriate time zone shall be included (i.e. 17:00 EDT). Time identification is not required for Operating Instructions that are expected to be implemented immediately.

6. For Operating Instructions that reference transmission lines (including Transmission interface Elements and Transmission interface Facilities), the line identification shall include Terminal to Terminal designation, voltage level and line number. When referencing other equipment at a substation in an Operating Instruction, the designation shall include substation name, equipment number and equipment type. Voltage level can be used as a clarifier if needed. When referencing a generating unit in an Operating Instruction, the designation shall include the generating station name and unit number.

Examples:

- Transmission Line: Bedington-Black Oak 500 kV 544 line
- Substation Equipment: Limerick 325 CB (500 kV)

7. For Operating Instructions that reference alphanumeric information, phonetically correct alphanumeric clarifiers can be used, if needed, to minimize misinterpretation.

Note 1: PJM members are obligated to follow all instructions as described in the PJM Operating Agreement, NERC Standards and PJM Manuals. If a PJM member is unable to comply with a PJM Operating Instruction, the member should notify PJM of the restriction (based on safety, loss of life, damage to equipment, or regulatory or statutory requirements) so PJM is able to implement other actions to alleviate the operational problems.

Note 2: Refer to M-13, Section 5 for communications of long lead unit commitments.

4.3.5 Communications Protocols Training Requirements

All operators listed in section 4.3.2 (Applicability) are required to complete initial training on these Communication Protocols and Definitions prior to issuing and/or receiving Operating Instructions. PJM will make this training available through the PJM LMS and track operator completion of this required training. Member company training liaisons will also ensure completion of this training by the required operators.

4.3.6 Communication Protocol Assessment

Each entity listed in section 4.3.2 (Applicability) shall assess adherence to these Communication Protocols following the process below.

This assessment of the individual operators will:

- Evaluate each of an entity's operators adherence to the Communication Protocols outlined in section 4.3.4 at least once every 12 months.
- Provide feedback to each operator based on the results of this assessment.
- Take corrective actions, as deemed necessary by the entity, to address deviations from the documented protocols.
    - These corrective actions could include performance coaching, additional training or other methods determined by the entity as effective in correcting the identified deficiency.

Note: If the assessment reveals that these protocols were not used in an Emergency, it may constitute a violation of COM-002-4, R5, R6 or R7.

PJM will utilize the System Operations Subcommittee to assess the effectiveness of these Communication Protocols at least once every 12 calendar months.

The assessment of the Communication Protocols will:

- Evaluate any operating errors or events that involved communication errors or misunderstandings
- Evaluate the effectiveness and efficiency of operator communications utilizing the Communication Protocols.
- Evaluate whether or not any modifications to the Communication Protocols are required (while ensuring continued compliance with COM-002-4).

Section 5: Metering Requirements

Welcome to the *Metering Requirements* section of the PJM Manual for *Control Center Requirements*. In this section you will find the following information:

- A general description of the purpose of having billing metering standards (*see "Purpose & Criteria*").
- The overall requirements for the billing metering (see "*General Guidelines*").
- The basic metering requirements in terms of accuracy, backup, location, alternative installation methodology, tie circuits, non-contiguous load, and maintenance (see "*Primary Metering Requirements*").

5.1 Purpose & Criteria

All electricity recording metering equipment is operated and maintained to assure, to the maximum extent possible, that the equipment provides an accurate record of the quantities supplied to and received by all parties. Each PJM Member is responsible for properly maintaining its metering and telemeter equipment in accordance with applicable ANSI standards.

This section provides the minimum standard requirements for the billing metering for new meter installations to be used in transactions with PJM. The standards apply to new meter installations, replacement meter installations, or upgrades to existing installations.

The standards in this section are a minimum requirement and do not supersede more restrictive agreements. In cases in which standards differ, the most restrictive criteria take precedence. More specific standards may be required by local, state, or federal regulations, host utilities, service providers, or as are mutually agreed upon.

5.2 General Guidelines

All PJM Members involved with any interface with PJM shall abide by the following general guidelines for Billing Meter Standards:

- Reliable and compliant operational metering equipment is in place for any metered service that is billed.
- Meter information is automatically and electronically communicated to PJM by the producer, host utility, or transmitter in order to ensure timely accounting and billing. This enables PJM to identify and resolve erroneous information and to account and bill for services. Communication between PJM Members other than PJM may utilize any method, such as voice notification or paper document if mutually agreeable.
- Billing metering systems are capable of collecting and storing bi-directional information for intervals as determined by the parties involved. The expense and practicality of reporting information for small data intervals may not be cost effective or prudent. The average of instantaneous values can be used, provided that a mutually agreed upon accuracy is obtained and applicable standards are achieved. Meter intervals can be of lesser duration for some services, but common intervals are fifteen minutes, thirty minutes, and sixty minutes. Collected meter information

may be transmitted to the appropriate parties with a different frequency than it is collected, as communications systems permit.

- The megawatt-hour (MWh) is the standard unit of service measurement. Service may be measured in kilowatt-hours (kWh) if required by specific services, local or state regulations, host utilities, service providers, or as are mutually agreed upon by the parties involved. kWh information may be used by the parties involved but must be converted to MWh information before transmission to PJM.
- All metered generator data values are to be supplied to the required parties in "net" form. "Net" shall be defined as "gross" output minus unit station light and power components. When metering limitations require "gross" values to be used, the "gross" to "net" calculation method must be approved by the PJM Operating Committee for use by PJM Members in the calculation of "net" data values.
- All meter records and associated documentation is retained for a period of seven years for independent auditing purposes.
- Any dispute involving any aspect of the billing metering standards or their application are resolved as described in the PJM Manual for ***Administrative Services for the PJM Interconnection Agreement (M-33).***

5.3 Primary Metering Requirements

The primary metering requirements are:

- For billing purposes, watt-hour meters are recognized as the official source of meter information.
- Metering devices must be capable of collecting and storing information for intervals required by the service provided, and as mutually agreed upon by the parties involved.
- Any generation unit participating in the PJM Energy Market is required to have independent metering devices that are capable of recording generation net MWh output. When metering limitations require variance from this standard, the metering system must be mutually agreed upon by the parties involved.
- All manual or additional meter reading or comparisons required to ensure consistent valid meter information ("true-up"), are performed prior to the billing cycle, as mutually agreed upon by the parties involved. Current billing cycles are monthly.

Each meter must follow the specific metering requirements associated with:

- Accuracy
- Backup Metering Requirements
- Location of Meter Points
- Alternative Approach
- Tie Line Telemetry Specification
- Geographically Non-Contiguous Load
- Maintenance

5.3.1 Accuracy

The minimum metering accuracy for each measuring device is defined by prevailing ANSI and NERC standards. The standards in this attachment are a minimum requirement, and do not supersede more restrictive agreements. In cases in which standards differ, the most restrictive criteria take precedence.

The manufactured accuracy class of all energy interchange billing devices should be accurate within ±0.3% of full scale.

An individual metering system at a metering point location includes all components from the meter location through to the system operator destination. The accuracy of the total energy interchange billing metering system, at each generator or transformer location, is to be within 1.0%. More restrictive standards may be required by local or state regulations, host utilities, service providers or as are mutually agreed upon by the parties involved.

Each individual metering system at each metering point location used for billing is tested by the owner of the equipment at intervals of two years and its accuracy of registration maintained in accordance with good practice. At the request of any party, an individual meter system will be tested, but, if an error of less than 1.0% is observed, the requesting party will pay for the test. PJM is to be notified of the error for auditing purposes.

5.3.2 Backup Metering Requirements

The backup metering system is of sufficient accuracy to serve as a replacement for the primary metering system. The average of instantaneous values may be used as a backup source, provided mutually agreed upon accuracy is obtained and applicable standards are achieved.

The backup metering system is capable of collecting interchange data and logically comparing data with the primary meter system so that material differences may be detected in a reasonable time.

If any test of an individual metering system discloses an error of greater than 1.0%, the accounts of the parties shall be adjusted for no more than two months for which the inaccuracy is estimated to have occurred. Longer correction periods, if confirmed by recorded information or defined as a result of the dispute resolution process, may be mutually agreed upon by the parties involved. All errors of the above magnitude shall be reported to PJM and documented for auditing purposes.

5.3.3 Location of Meter Points

Interchange billing metering is provided on the system as follows:

- *Transformers: Through-Transmission* — EHV interchange metering points are provided from the secondary side of all through-transmission transformers connected to the 500 kV EHV system. For example, interchange metering is provided on the 230 kV side of a 500/230 kV through-transmission transformer.
- *Generators and Transformers Radially Tapped* — Generators and transformers that are not through transmission (including unit station service transformers) and that are tapped directly on the 500 kV EHV system are provided with interchange metering on the primary side (500 kV) of the step-up, station service or radial transformer. For instance, a generator connected to the EHV system has an interchange metering point on the 500 kV side of the unit step-up transformer. All other generators and

transformers not connected to the 500 kV system provide information as received from the high side or the low side of the unit transformer.

5.3.4 Alternative Approach

In lieu of providing interchange billing metering, a PJM Member may elect to install a watt-hour metering system on the opposite side of the transformer than directed above (the 500 kV side of the through-transmission transformer or the 230 kV side of the radial transformers) provided that a compensation system is included to capture and adequately adjust interchange values to account for transformer losses. Any design for alternative metering approaches shall be documented and made known to PJM and all parties involved. Any alternative approach must be approved by PJM.

For through-transmission transformers, interchange values may be determined from the 500 kV side if compensation is installed which subtracts transformer losses when power is imported to the PJM Member or adds transformer losses for exported power.

5.3.5 Tie Line Telemetry Specification

Following are the telemetry requirements for monitoring PJM Ties with any neighboring external Balancing Authority (BA) (See Figure 1). These requirements are also applicable to ties defined between Transmission Zones internal to PJM (eg: AEP-DEOK etc.) (See Figure 2) This will apply to any existing tie lines that get modified.

<u>From the primary metering BA/Transmission Operator (TO):</u>

1. Primary Meter Reading (Required) – this value must be revenue quality and reflect the value that originates from the meter that has been agreed upon with the neighboring BA/TO as the Primary meter.
2. Secondary Source Secondary Meter Reading – this value represents the through pass of the tie line secondary meter measurement by the BA/TO that has the primary metering and should be sent to PJM if available. (Same value as received from the TO having the Secondary Meter Reading (4), via a different data communication path).
3. If the PJM TO is the primary metering end of the line for external tie-lines then PJM will need to send that value to the neighboring BA.

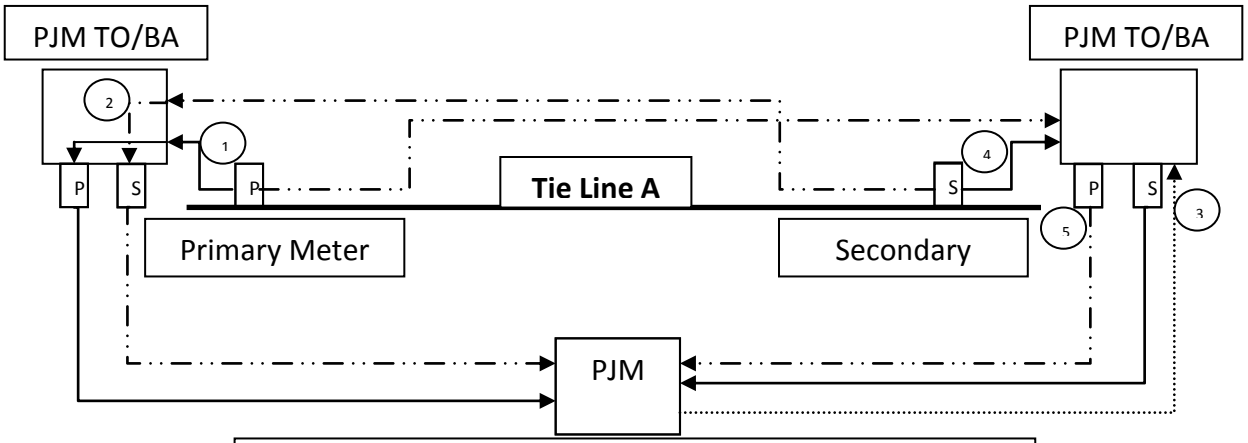

Figure1: Telemetry Requirement for External Tie-lines

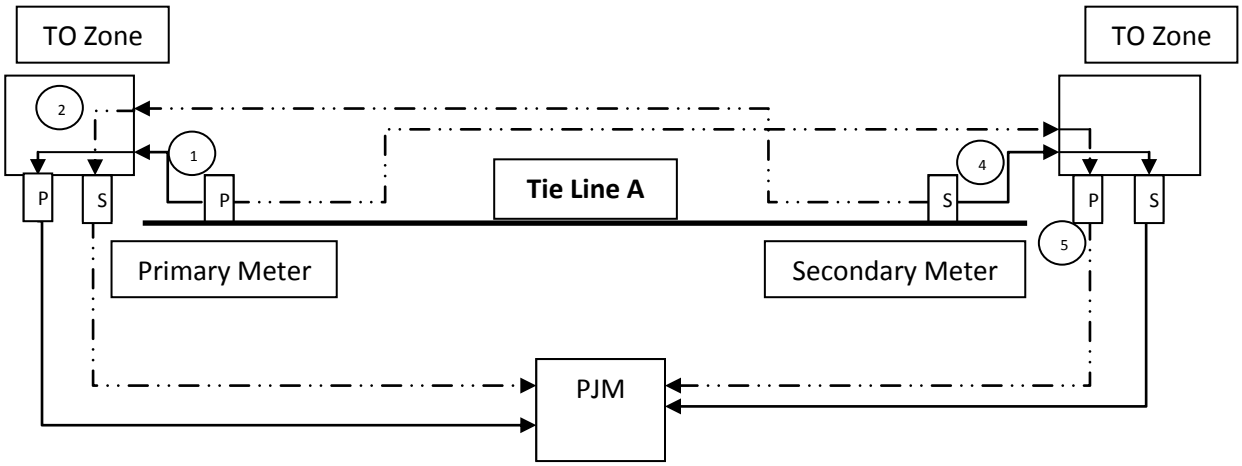

Figure 2: Telemetry Requirements for PJM Internal Tie-Lines between Transmission Zones

——— Required
—·—·— Optional
····· If PJM TO is Primary end, need to send primary metering to BA

<u>From Secondary BA/TO Control Zone;</u>

4. Secondary Meter Reading (Required) – the tie line secondary meter that can be used during primary meter outages or maintenance; the value for this meter should be sent to PJM.
5. Secondary Source Primary Meter Reading – this value if available must reflect the value that originates from the meter that has been agreed upon with the neighboring PJM BA/ TO Control Zone as the Primary meter (same value as received in the TO Primary Meter Reading (1), via a different data communication path).

<u>Tie line notification:</u>
The TO is required to submit all new tie lines requests before the 1st of the month prior to the month of the requested tie line being energized at the PJM SOS meeting. The TO who does the notification should know which end is the primary metering point and expected date the line is to be energized.

<u>Dynamic Schedule/ Pseudo Tie Telemetry Specification:</u>
Following are the telemetry requirements for monitoring PJM Dynamic Schedules/ Pseudo Ties with any neighboring external Balancing Authority (BA).

<u>From the primary metering BA/Transmission Operator (TO):</u>

1. Primary Meter Reading (Required) – this value must be revenue quality and reflect the value that originates from the meter that has been agreed upon with the neighboring BA/TO as the Primary meter.

2. Secondary Source Primary Meter Reading – this value must reflect the value that originates from the meter that has been agreed upon with the neighboring PJM BA/ TO Control Zone as the Primary meter (same value as received in the Primary Meter Reading, via a different data communication path).
3. For PJM Members any dynamic schedule over 10 MW the data link that the values are sent over must be setup to use a PJM-NET connection.

Any exception to the required telemetry will be reviewed on a case by case basis at PJM's discretion.

Dynamic Schedule notification:
PJM must be notified as soon as possible of new Dynamic Schedules and PJM will determine if the time line is achievable.

Tie Line and Dynamic Schedule/ Pseudo Tie Telemetry Specification:

Time line to receive telemetry:

- All required telemetry shall be available 2 weeks in advance of the tie line being energized.
- All tie line ICCP Object ID changes shall be communicated to PJM 2 weeks in advance of change.

Telemetry accuracy:
All tie line telemetry shall be scanned at a periodicity of equal to or less than 4 seconds (2 seconds is preferred) and 2 % accuracy for entire range. Metering issues/outages impacting accuracy of available telemetry should be brought to PJM's attention by TO/ Generation Company owning the metering along with an estimate on when the issues will be resolved.

Telemetry Link Requirements:

AGC input type	**Type of Redundancy**	**Data Link Type**
Tie Line voltage greater than or equal to 69 KV	redundant point source	Dual PJM Net Connection
Tie Line voltage less than 69 KV	single point source	DNP over internet or existing ICCP connection
Dynamic Schedule/ Pseudo Ties greater than or equal to 100 Mw	redundant point source	Dual PJM Net Connection
Dynamic Schedule/ Pseudo Ties greater than or equal to 10 Mw and less than a 100 MW	redundant point source	single PJM Net Connection
Dynamic Schedule/ Pseudo Ties less than 10 MW	single point source	DNP over internet or existing ICCP connection

5.3.6 Geographically Non-Contiguous Load

Any PJM Member serving a load which is geographically non-contiguous to its defined service area documents and makes known to PJM, and all other parties involved, any metering and system conventions implemented in order to meter the load. Metering devices may be met by contractual arrangement with any party involved. Any alternative approach must be approved by PJM prior to implementation. This enables PJM to monitor and control the transmission system, to identify and resolve erroneous information, to account and bill for services and to take appropriate action for reliability concerns.

5.3.7 Maintenance

The accuracy of all recording meters, as required to transact energy services, is verified by tests conducted by the equipment owner once every two years. If such test identifies, or other indications show, a recording meter is out of service or inaccurate, the owner must take action to restore the meter to correct operation within a reasonable time. In the interim, backup metering may be used as mutually agreed by the parties involved. All equipment must be restored to correct operation within the period of 30 days from the date of discovery, or a date mutually agreed upon by all parties. If equipment installation or replacement is required to resolve the inaccuracy, all equipment must be correctly operating at a date mutually agreed upon by all parties. PJM is notified of the inaccuracy, interim procedures, and resolution for auditing purposes.

Periodic accuracy compliance testing may be requested by PJM Member agreement groups, as required. Authentication of current meter testing and validation of newly installed or repaired meter systems may also be required.

The results of all accuracy testing are reported to PJM. As a minimum, PJM maintains a metering database documenting the test results for all PJM Member metering tests that show errors of greater than 1% for auditing purposes.

5.4 Meter Accuracy Standards

Welcome to the *Meter Accuracy Standards* section of the PJM Manual for *Control Center Requirements*. In this section you will find the following information:

- A general description of the purpose and applicability of metering standards (see "*Purpose*").
- The overall requirements for telecommunications metering (see "*General Guidelines*").
- The overall requirements for metering accuracy (see "*Primary Metering Accuracy*").
- Requirements for data needed for system control data (see "*System Control Monitoring Requirements*").
- Requirements for data used in system security monitoring (see "*Real-Time Analysis Monitoring Requirements for System Security*").
- A description of the requirements intended to assure reliable dispatch (see "*Dispatching Requirements*").

5.4.1 Purpose

This section provides the minimum standard requirements for telecommunications metering, such as MW, MVAR, and kW values, to be used when communicating information to PJM. The standards apply to new meter installations, replacement meter installations, or upgrades to existing installations. The requirements for billing meters are covered in Para 5.3.1.

These standards are a minimum requirement and do not supersede more restrictive agreements. In cases in which standards differ, the most restrictive criteria take precedence. More specific standards may be required by local, state, or federal regulations, host utilities, service providers, or as are mutually agreed upon.

5.4.2 General Guidelines

All PJM Members involved with any interface with PJM abide by the following general guidelines for telecommunications metering:

- All electric measurement equipment is operated and maintained so as to assure, to the maximum extent possible, that it provides an accurate record of the quantities supplied to and received by all parties.
- Each PJM Member is responsible for properly maintaining its metering and telemeter equipment in accordance with applicable ANSI standards.
- Metered information is automatically electronically communicated to PJM by the producer, host utility or transmitter in order to ensure system security and reliability.
- It is important to recognize the importance of accurate data as well as the need to meet deadlines associated with updating this data, since the failure to provide accurate and timely data affects reliable system operations.

5.4.3 Primary Metering Accuracy

For all new metering installed since December 1, 1997, the following primary transducer accuracy guidelines are followed:

Primary Transducer	Accuracy Guideline
Frequency Transducers	0.001 Hz
Potential Transformers	0.30% of Full Scale
Current Transformers	0.50% of Full Scale
MW/MVAR/Voltage Transducers	0.25% of Full Scale
Remote Terminal Units (A/D)	0.25%of Full Scale

Exhibit 1: Primary Transducer Accuracy Guideline

This accuracy guideline results in an overall metering accuracy better than 2% and satisfies the NERC BAL standards. Billing accurate telemeter data values should be supplied whenever possible.

5.5 System Control Monitoring Requirements

Data required for system control monitoring provides PJM dispatcher with the necessary information to meet the continuous requirement of matching the generation with the load

demand and to assure that system security is maintained. There are four classes of system control data:

- System control data
- Area regulation data
- Dispatch data
- Reserve data

The frequency and accuracy of data transmission, unless otherwise noted, applies to the primary source of telemeter data, the backup source when the primary is unavailable and backup source for tie line and frequency data.

5.5.1 System Control Data

System control data is required to match the load demand with the available generation. This is accomplished by measuring the actual tie-flow values and the actual frequency and using them in a calculation with the scheduled total tie-line value and the scheduled frequency. PJM Members that control generation participate in time error control by raising or lowering frequency schedules by 0.02 Hz at the direction of PJM (see the ***PJM Manual for Balancing Operations (M-12)***).

System control data is also required to facilitate system restoration (see the ***PJM Manual for System Restoration (M-36)***). Specifically, a system frequency measurement is required to be transmitted to PJM from each Transmission Zone. Frequency of Acquisition — ≤4 seconds, Metering Accuracy — 2%

Balancing Authority (PJM) Control Room Time Error and Frequency devices will be checked and calibrated against a common reference at least annually. The Balancing Authority shall adhere to the minimum accuracy values for measuring devices as follows:

- Digital frequency transducer, ≤ 0.001 Hz
- MW MVAR, and voltage transducer, ≤ 0.25 % of full scale
- Remote terminal unit, ≤ 0.25 % of full scale
- Potential transformer, ≤ 0.30 % of full scale
- Current transformer**,** ≤ 0.50 % of full scale

5.5.2 Area Regulation

Area regulation data is required to ensure that the instantaneous mismatches of load and generation are corrected by sending a generation control signal to those plants/stations/PJM Members scheduled to provide this ancillary service. PJM calculates the desired area regulation signal and the signal is transmitted to the designated provider of this service.

- Frequency of Acquisition — ≤4 seconds
- Metering Accuracy — 2%

PJM Members must have the ability to receive a regulation signal and must have the ability to adjust generation manually to maintain scheduled interchange if automatic generation control becomes inoperative.

5.5.3 Dispatch Data

The plant/station/PJM Member provides to PJM the individual generation availability by providing the necessary information to dispatch the generation. For PJM dispatchable generation, the appropriate operating data points are provided to PJM either through an EMS data link or through the eMarket interface whenever the data changes. For self-scheduled generation, the self-scheduled value is transmitted twenty minutes prior to any changes. PJM uses its Security Constrained Economic Dispatch (SCED) to determine the appropriate generation output which is then sent to each plant/station/PJM Member in the form of an individual unit MW base point, to be used as the dispatch signal, and an individual unit dispatch lambda, used for informational purposes only. PJM Members with generation notify PJM of any actual or potential changes in unit status or capacity.

- Frequency of Acquisition — ≤10 seconds
- Metering Accuracy — 2%

5.5.4 Reserve Data

The availability of generation reserve is transmitted to PJM from the individual plant/station/PJM Member. This data is used to determine the reliability of the PJM RTO.

- Frequency of Acquisition — ≤10 seconds
- Metering Accuracy — 2%

Attachment A: Information Access Matrix

The following Information Access Matrix lists each of the major PJM services that affect PJM Members. It differentiates these services by PJM member type and by information access method. This Information Access Matrix should be considered as a rough approximation only. The PJM Customer Relations and Training Department is available to provide more specific information concerning PJM services and access methods.

A: Generation Scheduling Services						
	Information Services	**PJM Member Regional Transmission Owner**	**PJM Member Generating Entity**	**PJM Member Load Serving Entity**	**PJM Member Marketer**	**Neighboring Control Areas**
	Inputs to PJM					
A.1	Hydro Constraint Information (pool scheduled resources) [submitted daily by hydro plants] via eDART		2			
A.2	Generator Outage Information [submitted daily] via eDART		1			4
A.3	Daily Generator Bids (cost, availability, etc.) [submitted by noon for next day] via eMKT		3			
A.4	Daily Area Regulation Bids via eMKT		7			
A.5	Daily Synchronized Reserve Bids via eMKT		3			
	Outputs from PJM					
A.6	Daily Hydro Schedules (hourly generation and capacity) [read only] via eDART		2			
A.7	Daily Hydro Schedule Updates via eDART		2			
A.8	Daily Managers Report on Joint Owned Units [reported to joint plant owners]		5			
A.9	Daily Load Forecasts (peak loads, congestion) via eDADA, Operational Data page on pjm.com	O		O	O	O
A.10	Reliability Information (Forecasted Load via eDATA, Minimum Generation Problems, Outages, Available Capacity) via eDART and Emergency Procedures	O				X
A.11	Daily Generator Bid Confirmations (cost, availability, etc.) via eMKT		2			
A.12	Selected Generators (next day schedule)[distributed to selected generator owners] via eMKT		2			

Key:
X – Required Service
O – Optional Service
1 – Mandatory For All Generation Within the PJM RTO
2 – Mandatory For Unit Specific Generation Bidding
3 – Mandatory For All Capacity Resources
4 – System Reliability Information Only
5 – Mandatory For Joint-Owned Unit Owners
6 – Mandatory If Not Attainable From Existing Telemetry
7 – Mandatory For Generators Offering Regulation

Exhibit 2: Generation Scheduling Services

B: EMS Services						
	Information Services	**PJM Member Regional Transmission Owner**	**PJM Member Generating Entity**	**PJM Member Load Serving Entity**	**PJM Member Marketer**	**Neighboring Control Areas**
	Inputs to PJM					
B.1	CT Generator Availability Updates via eMKT, eDART		1			
B.2	Confirmed Regulation MWs via eMKT		7			
B.3	Telemetry Status & Analog Values [real-time] via SCADA or ICCP	X	X	6		4
B.3.1	MW on BES Facilities	X	X			
B.3.2	MVAR on BES Facilities	X	X			
B.3.3	Voltages on BES Facilities	X	O			
B.3.4	Tap Position on BES Transformers	X				
B.3.5	Frequency	X	X			
B.3.6	Status of BES Circuit Breakers	X	X			
B.3.7	Phase Shifter Tap Position (if in Zone)	X				
B.3.8	Static VAR Compensator status (if in zone)	X				
B.3.9	Status of some BES Disconnects	O				
B.,3.10	Temperatures	O				
B.4	AVR/PSS Excitation Control		1			
B.5	Black Start Test Data		X			
	Outputs from PJM					
B.6	CT On/Off Times for PJM Units Only		1			
B.7	Requests for Regulation MWs via SCADA , ICCP		7			
B.8	Real-time Transmission Status (Line Outages, etc.) [PJM dispatcher communication to other CCs] via SCADA, ICCP, and eDART	X				4
B.9	Real-time Generation Status (Generation Inquiries, etc.) PJM dispatcher communication to other CCs, MOC		X			4
B.10	Real-time Informational, Operational, and Emergency Messages [broadcast to all LCCs] via ICCP, Emergency Procedures	X				

B: EMS Services						
	Information Services	**PJM Member Regional Transmission Owner**	**PJM Member Generating Entity**	**PJM Member Load Serving Entity**	**PJM Member Marketer**	**Neighboring Control Areas**
B.11	Generation Dispatch [relayed ≤ 10s, or manually] via SCADA, ICCP		X			
B.12	Generation Regulation Control [relayed ≤ 10s] via SCADA, ICCP		7			
B.13	Real-time Telemetry (status & analog values) [relayed to other CCs] via SCADA, ICCP	X	X	6		4
B.14	AVR/PSS Excitation Control via eDART	X				

Key:
X – Required Service
O – Optional Service
1 – Mandatory For All Generation Within the PJM RTO
2 – Mandatory For Unit Specific Generation Bidding
3 – Mandatory For All Capacity Resources
4 – System Reliability Information Only
5 – Mandatory For Joint-Owned Unit Owners
6 – Mandatory If Not Attainable From Existing Telemetry
7 – Mandatory For Generators Offering Regulation

Exhibit 3: EMS Services

C: Historical EMS Data Services						
	Information Services	**PJM Member Regional Transmission Owner**	**PJM Member Generating Entity**	**PJM Member Load Serving Entity**	**PJM Member Marketer**	**Neighboring Control Areas**
	Inputs to PJM					
C.1	Historical EMS Information Requests [submitted per request to PJM for processing]	X				4
	Outputs from PJM					
C.2	Historical EMS Information [distributed to requesting parties]	X				4

Key:
X – Required Service
O – Optional Service
1 – Mandatory For All Generation Within the PJM RTO
2 – Mandatory For Unit Specific Generation Bidding
3 – Mandatory For All Capacity Resources
4 – System Reliability Information Only
5 – Mandatory For Joint-Owned Unit Owners
6 – Mandatory If Not Attainable From Existing Telemetry
7 – Mandatory For Generators Offering Regulation

Exhibit 4: Historical EMS Data Services

D: Transmission Maintenance Planning Services						
	Information Services	**PJM Member Regional Transmission Owner**	**PJM Member Generating Entity**	**PJM Member Load Serving Entity**	**PJM Member Marketer**	**Neighboring Control Areas**
	Inputs to PJM					
D.1	3-4 Day Ahead Transmission Maintenance Schedules [planned outages, submitted by transmission providers per Manual 03] via eDART	X				
D.2	3-4 Day Ahead Neighboring Control Area Transmission Maintenance Schedules (planned outages) [submitted by neighboring control areas] via phone and eDART					X
	Outputs from PJM					
D.3	3-4 Day Ahead Transmission Maintenance Schedules (planned outages) [confirmation of D.1] via eDART	X				X
D.4	3-4 Day Ahead Neighboring Control Area Transmission Maintenance Schedules (planned outages) [confirmation of D.2]					X
D.5	Transmission Maintenance Schedule (planned outages) [monthly report sent to all transmission providers] via eDART	X				X

Key:
X – Required Service
O – Optional Service
1 – Mandatory For All Generation Within the PJM RTO
2 – Mandatory For Unit Specific Generation Bidding
3 – Mandatory For All Capacity Resources
4 – System Reliability Information Only
5 – Mandatory For Joint-Owned Unit Owners
6 – Mandatory If Not Attainable From Existing Telemetry
7 – Mandatory For Generators Offering Regulation

Exhibit 5: Transmission Maintenance Planning Services

E: Transmission Services						
	Information Services	**PJM Member Regional Transmission Owner**	**PJM Member Generating Entity**	**PJM Member Load Serving Entity**	**PJM Member Marketer**	**Neighboring Control Areas**
	Inputs to PJM					
E.1	Transmission Reservations [reserved through OASIS]		O	X	X	
E.2	Network Transmission Services			X		
	Outputs from PJM					
E.3	Available Transmission Capacity [posted on OASIS]			X	X	
E.4	Actual Energy Transactions [posted on OASIS 7 days later]	X	X	X	X	
E.5	Informational Messages [posted on OASIS]	X	X	X	X	
E.6	Ancillary Services [posted on OASIS]	X	X	X	X	
E.7	Approved Transmission Reservation Requests via OASIS			X	X	
E.8	Summary of Month End Transactions via billing, OASIS	X				

Key:
X – Required Service
O – Optional Service
1 – Mandatory For All Generation Within the PJM RTO
2 – Mandatory For Unit Specific Generation Bidding
3 – Mandatory For All Capacity Resources
4 – System Reliability Information Only
5 – Mandatory For Joint-Owned Unit Owners
6 – Mandatory If Not Attainable From Existing Telemetry
7 – Mandatory For Generators Offering Regulation

Exhibit 6: Transmission Services

F: Energy Transaction Services						
	Information Services	**PJM Member Regional Transmission Owner**	**PJM Member Generating Entity**	**PJM Member Load Serving Entity**	**PJM Member Marketer**	**Neighboring Control Areas**
	Inputs to PJM					
F.1	External Energy Transactions via ExSchedule			X	X	
F.2	Non-PJM Energy Transactions (Wheels, etc.) [submitted by neighboring control areas] via ExSchedule					X
F.3	Updates / Additions to Energy Transaction Schedule via ExSchedule and NERC tag			X	X	X
F.4	Internal Energy Transactions via InSchedules			X		
	Outputs from PJM					
F.5	External Energy Transactions [collectively confirmed by PJM & communicated to neighboring control areas] via ExSchedule			X	X	X

Key:
X – Required Service
O – Optional Service
1 – Mandatory For All Generation Within the PJM RTO
2 – Mandatory For Unit Specific Generation Bidding
3 – Mandatory For All Capacity Resources
4 – System Reliability Information Only
5 – Mandatory For Joint-Owned Unit Owners
6 – Mandatory If Not Attainable From Existing Telemetry
7 – Mandatory For Generators Offering Regulation

Exhibit 7: Energy Transaction Services

G: Long-term Planning Services						
	Information Services	**PJM Member Regional Transmission Owner**	**PJM Member Generating Entity**	**PJM Member Load Serving Entity**	**PJM Member Marketer**	**Neighboring Control Areas**
	Inputs to PJM					
G.1	Capacity Information (spreadsheets)	X				
G.2	Load Information (spreadsheets)	X				
G.3	Load Flow Information	X				
G.4	Short Circuit Information	X				
G.5	Dynamics Information	X	1			
G.6	LAS Load Information	X				
G.7	Generator Events Information (GADS dataset) [submitted by plant operations]	X	1			
G.8	PROMOD information File (Generation Production Cost Information) [submitted by generation planning into central planning database]	X	1			
G.9	Generation Planning Maintenance Outage Reports [compiled from transmission planning tools]	X	1			
G.10	Long-term Capacity Planning Information [submitted by transmission planning]	X				
G.11	Performance Adequacy Assessments (financial Studies)	X	X	X	X	
G.12	Generator Planning Study [distributed to committee members]	X	O	O	O	
G.13	Supplemental Agreement (Forecast Obligation) [distributed to committee members]	X	O	O	O	
G.14	LAS Report [submitted to Reliability Committee]	X	O			
G.15	GORP Reports [distributed to generation planning]	X	O			

Key:
X – Required Service
O – Optional Service
1 – Mandatory For All Generation Within the PJM RTO
2 – Mandatory For Unit Specific Generation Bidding
3 – Mandatory For All Capacity Resources
4 – System Reliability Information Only
5 – Mandatory For Joint-Owned Unit Owners
6 – Mandatory If Not Attainable From Existing Telemetry
7 – Mandatory For Generators Offering Regulation

Exhibit 8: Long-term Planning Services

H: PJM Administration Services						
	Information Services	**PJM Member Regional Transmission Owner**	**PJM Member Generating Entity**	**PJM Member Load Serving Entity**	**PJM Member-Marketer**	**Neighboring Control Areas**
	Outputs from PJM					
H.1	PJM Information [on PJM Web site]	X	X	X	X	X
H.2	RTO Information [on PJM Web site]	X	X	X	X	X
H.3	FERC Filings [on PJM Web site]	X	X	X	X	X
H.4	Training Information [on PJM Web site]	X	X	X	X	X
H.5	Emergency Information [on PJM Web site]	X	X	X	X	X
H.6	General Administration Information [distributed via fax to all participants]	X	X	X	X	X
H.7	Regulatory Reporting (FERC 714, 715; EIA 411)	X	X	X	X	

Key:
X – Required Service
O – Optional Service
1 – Mandatory For All Generation Within the PJM RTO
2 – Mandatory For Unit Specific Generation Bidding
3 – Mandatory For All Capacity Resources
4 – System Reliability Information Only
5 – Mandatory For Joint-Owned Unit Owners
6 – Mandatory If Not Attainable From Existing Telemetry
7 – Mandatory For Generators Offering Regulation

Exhibit 9: PJM Administration Services

Attachment B: Schedule of Data Submittals

In order for PJM to provide satisfactory evidence to demonstrate compliance, PJM members are required to provide the following information to PJM on a frequency noted below

Standard Reference	To be Submitted	Frequency and Date
TOP–006-2R6	Tie line meter accuracy for each tie line. Submittal to be provided via PERCS website.	(Annual)Recommend September 30
EOP-003-1 R2	UFLS data (similar to current process for annual request of information). Submittal to be provided via PERCS website.	(Annual) Recommend May 1
EOP-003-1 R8	How each TO plans to implement load reduction in sufficient time and amount if directed by PJM. Submittal to be provided via PERCS website.	(Annual) Recommend March 1
EOP-005-2 R10	Assurance that their personnel have been trained annually in the implementation of the Restoration Plan and that they have participated in restoration exercises with auditable records that could be obtained upon request by PJM. Response can just be an affirmative confirmation. Assurance could be made by Tos via submittals provided via PERCS website	(Annual) Recommend December 31
EOP-005-2 R3	Submit TO Restoration Plan, Ensure Annual Review is noted in plan revision history section. Submittal to be provided via eDART Black Start application.	(Annual) Within Annual Definition of last submittal – per table 1 of Attachment G of M-36
EOP-005-2 R4	Submit TO changed System Restoration Plan via eDART Black Start application if conditions of EOP-005, R4 are met	Within 90 days of unplanned changes or before planned changes that affect System Restoration Plan
EOP 008-1 R7	Coordinate and submit a TO backup test with PJM and provide evidence of its performance. Submittal to be provided via PERCS website.	(Annual) Recommend September 30
EOP-008-1 R5	Certification to PJM that the TO Operating Plan for backup functionality has been reviewed in its entirety and updated appropriately. Such review effort should be noted in plan revision history section.	(Annual) Recommend December 31

Standard Reference	To be Submitted	Frequency and Date
	Response can just be an affirmative confirmation. Submittal to be provided via PERCS website.	
EOP-008-1 R5.1	Certification to PJM of changes to the TO Operating Plan for backup functionality. Submittal to be provided via PERCS website.	Within 60 days of any changes
EOP-*010-1* R1.2	Submit TO GMD procedure. Ensure Annual Review is noted in plan revision history section. Submittal to be provided via PERCS website.	Annual - recommend April 1 or anytime the TO GMD procedure is updated.

Attachment C: Notification of Member Company System Outages

1. Members and PJM should provide an email coordination notice *24 business hours in advance of significant system changes *that could affect ICCP data link communications or the data exchange with PJM.*
   a. Data Set Switches (this does not include database updates, editing data exchange lists, etc. unless they include an outage)
   b. Significant Software Enhancements
   c. Communication line outages
   d. Backup center testing
   e. Failovers to alternate sites
   f. ICCP server failovers.
   g. Network and Firewall maintenance
   h. RTU outages or changes to RTU data sent to PJM for RTUs connected to EHV (345kv and above) facilities.
   i. 1 day notice required.
2. The PJM EMS Networking group will coordinate any technical details, additional support, etc. with the member company.
3. Members providing notification should send it to the following email address (outage@pjm.com). In an emergency, call the PJM Support Center at 610-666-8886 or the Dispatch Supervisor at 610-666-8806.
4. The notification should include:

- The action being taken by the member company (see 1 above)
- Planned length *and expected time* of the outage
- Potential impact to PJM
- Member contact information

5. Member Company System Operator should coordinate final outage with the PJM Dispatch Supervisor (610-666-8806) 15 minutes prior to the event.

- PJM will communicate any additional system conditions which would cause the outage to affect system reliability even if the conditions are not directly related to the requesting company. This communication can be through either a PJM Dispatcher or a member of the EMS Networking group working with the impacted member company. The communication will not contain any information that can identify another member company but will contain enough information to let the affected member company understand the severity of the situation.
- PJM fully understands the logistics and economic effect a delay or postponement can have on a member company. If the member company wishes to challenge or contest the delay or postponement, they should contact the PJM Shift Supervisor.

6. PJM will notify member companies of PJM initiated outages via an email list at least 24 business hours in advance through a self-subscribing alias Exchange list.

Note: In order for a Member Company to receive an email alert of a PJM generated outage, the company must have a permanent email address for this purpose. PJM will send outages to that email address, not the address of an individual person, since people can be re-assigned and change responsibilities. Additionally, the member company must subscribe to the outage list at pjm-linkoutage@lists.pjm.com.

7. PJM will follow-up significant outages with an All Call message 15 minutes prior to the outage.

Emergency System Outages and Unscheduled System Outages

1. Member Company System Operator should immediately notify PJM when an event has occurred to include EMS and State Estimator outages.
2. The member company should attempt to provide input into the expected length of the outage.
3. Member Company should notify PJM when system has returned to normal.
4. The PJM Manual 13, Emergency Operations, should be followed for all Emergency System Outages.

Outage Tracking

1. All outages (planned and unplanned) causing link reliability to drop below 99.8% in a 24 hour period will be reported and tracked with a cause code by PJM.
2. In the event that PJM detects a member outage of one hour or greater, PJM will immediately email the appropriate SIS representative in order to alert that representative and facilitate determination of outage details.
3. The following information items will be tracked for outages:
   a. Company Identifier (3 letter)
   b. Outage length (in minutes)
   c. Cause code (see table below):

Code	Description
PTV	PJM Telecom Vendor
MTV	Member Telecom Vendor
PPO	PJM Planned Outage
MPO	Member Company Planned Outage
PUO	PJM Unplanned Outage
MUO	Member Company Unplanned Outage
OTH	Other

Revision History

Revision 29 (12/18/2014):

- Added additional language and links to the bottom of Section 3.2.4 “PJMnet Communications System”

Revision 28 (11/07/2014):

- Added new Section 4.3 on PJM Communication Protocol in accordance with COM-002-4

Revision 27 (06/26/2014):

- Section 1, Add PJM Synchrophasor System to the list of PJM systems.
- Section 1.3, Definition of PJM Synchrophasor System.
- Section 2.2, Add PJM Synchrophasor data exchange to the list of PJM member data exchange service.
- Section 3.3, New section of PJM Synchrophasor System data exchange requirement
- Section 3.2.4. Added clarification for PJMnet connections for TO’s. Also referenced availability requirements in Manual 14d.

Revision 26 (04/11/2014):

- Two of the eSuite Applications have been renamed. Moving forward ESS will be known as ExSchedule and eMTR will be known as Power Meter.

Revision 25 (09/26/2013):

- Major changes to Section 5.3.5 Tie Line Telemetry Specification to provide more detailed requirements for Tie Line Telemetry.
- Miscellaneous changes to support Section 5.3.5 (minor change to 5.3, deleted 5.3.7)
- Changed numbering for sections 5.5 through 5.7 to make them subsections under Section 5.4 Meter Accuracy Standards.
- Major changes to Attachment B to remove redundant text and streamline table. EOP-005-2 and EOP-008-1 requirements updated in the table.

Revision 24 (08/01/2013):

- Added Section on 2.5.7 - Disclosure of EMS Data to Transmission Owners
- 3.2.3 Modified to clarify if manual approach is impractical
- 4.2.4 Modified keypad selection
- Attachment A - added reference for PJM related applications to inputs and outputs; added additional items per member input

Revision 23 (06/01/2013):

- Revisions for Curtailment Service Provider (CSP) dispatch instruction two way web service communications. (Section 1.9)

Revision 22 (2/28/2013):

- Administrative Change: Updated all references of “eSchedules” to “InSchedules”

Revision 21 (04/26/2012):

- Removed references to BUCC throughout the Man.
- Section 1 – Added eLRS, SCED, and removed UDS and HIS due to AC2 Implementation
    - Added CFE (Communications Front End)
    - HIS is still in the AC2 EMS, but it will not be used due to PJM’s preference to PI for visualizations.
    - Modes of Operation Options listed
    - EMS Support Systems Listed
- 1.1 Changes due to BUCC Elimination and AC2 Implementation
- 1.2 Removed SCADA, added GMS
- 1.3 Data Historian replaced with PI due to AC2 implementation
- 1.9 Added eLRS
- 2.2 Added ref for Planning section
- 2.3.1 Clarified unknown state to match Man 3.
- 2.5.1 Removed reference to Coal Pollution
- 2.5.6 Removed references to BUCC and added AC1 and AC2
    - Clarified Gen Owners design (removed “multiple” and added AC1, AC2, Man, and GMS)
- 2.7 Added PJM requirement to monitor system during transition to B/U facility
- 3.2.1 Changed Frame Relay to MPLS
- 3.2.4 Added MPLS and removed ref to Back Up
- 3.3.2 Added MPLS
- 3.4 AC2 Clarity for “Backup”
- 4.2.3 Removed references to Customer Relations Dept.
- 5.5 Changed para ref for Billing Meters
- 5.8.3 Replaced UDS with SCED
- Attch “B” – Added EOP 008 R1.5 to Table,
- Attch “B” – Changed ref for TO Backup Capability Plan
- Attch “C” – Clarified RTU outage reporting (24 hrs to 1 day for consistency)

Revision 20 (03/15/2011):

- 2.3.1 – Added 30 minute time limit to notification.

- 2.5.6 – Added Member TO training responsibilities and EMS configuration changes
- 5.8.1 – Added requirement for BA annual check of Fqcy and Time Error meters
- Attch B – Added months for submittals and changed Ref's for Tie Line meter checks. Reference cleanup.
- 3.5 – corrected typo for acquisition frequency
- 5.7 – added clarity to percentages
- Changed "Self Certification" to Submittals Attch "B"
- Added Table to Attch "B"

Revision 19 (03/15/2011):

- Sections 1 & 2 – Updated references to Manuals
- 2.3.1 – Clarified member TO requirements for security analysis capability
- 2.4 – Clarified 3 part communication
- 2.7 – Clarified back up capability
- 4.2.4 – Clarified 3 part communication
- 5.8.1 – Updated references to Manuals
- Attch A, H2 – Removed MAAC
- Attch C5 – Clarified process.

Revision 18 (01/24/2011):

- Added reference to Manual 40 in section 2.6
- Revision to 2.7 – changed 2 hours to 1 hour (EOP-008)
- Revisions to 4.2.4 for 3 part communications

Revision 17 (01/01/2010)

- Corrected section 2.7 from PJM EMS to transmission owner EMS and clarified timing requirement – within 2 hours
- Updated Section 3.2.3 changing 500 kV to 345 kV
- Updated language in section 4.2.4 to include a PJM definition of Directives
- Updated section 5.3.3 – generators (less than 500 kV) can be metered from high side <u>or</u> low side of GSU.
- Updated tables in Attachment A
- Added Attachment C – notification for system outages affecting telecommunications to include EMS and State Estimator outages.

Correction made January 4, 2010 to fix subsection numbering in section 4.2 and the table of contents.

Revision 16 (10/05/2009)

- Removed Attachment B – Nuclear Protocols – will be contained in M39 to be published 10/1/09
- Added Attachment B – Annual Data Submissions for Transmission Owners
- Added Section 2.7 – Backup Capability Requirements for Transmission Owners
- Updated language in Section 4.2.3 for 3 part communications and use of the term "directives"

Revision 15 (06/01/2009)

- PJM has conducted the 2009 annual review and update based on this effective date

Revision 14 (05/09/2008)

- 3 part communications guidance
- Annual review and update of complete manual for 2008.

Revision 13 (05/15/07)

Section 2: Control Center Requirements

Moved Training and Certification requirements to new Manual M40 Certification and Training Requirements.

Section 3: Communications & Data Exchange Requirements

- Provided language related to data communication outages and reporting.
- Provided additional clarity regarding satellite phone requirements.

Attachment C: PJM System Operator Training Requirements

Moved to new Manual M40 Certification and Training Requirements

Attachment D: Continuing Education Hour (CEH) Tracking Process

Moved to new Manual M40 Certification and Training Requirements.

Introduction trimmed to eliminate redundant information.

List of PJM Manuals exhibit removed, with directions given to PJM Web site where all the manuals can be found.

Section 4: Meter Accuracy Standards permanently moved to the end of the manual.

Revision 12 (09/13/06)

Section 2: Control Center Requirements

- Provided additional clarity regarding "Backup Recovery Procedures."

Attachment C: PJM System Operator Training Requirements

- Added more details to compliance monitoring, levels and process for noncompliance.

Attachment D: Continuing Education Hour (CEH) Tracking Process

- Made revisions to reporting forms.

Revision 11 (06/19/06)

Attachment C: PJM System Operator Training Requirements

- Added Training Requirements for Demand Resources providing Ancillary Services.
- Deleted obsolete paragraph on page 79 regarding certification of incumbent system operators.

Section 1 (PJM Systems), Page 8: Removed word “analog”.

Revision 10 (02/07/06)

Added Attachment D: Continuing Education Hour (CEH) Tracking

Added provision to maintain PJM System Operator Certification through CEH’s to Attachment C.

Miscellaneous minor revisions to correct current naming of Member Training offerings, and references to NERC policies.

Revisions were made on the following pages: 20-22, 27, 39, 54, 57, 62, 69, 80-83, 86-89, 91 and 102-118.

Revision 09 (9/01/05)

Added Attachment C: PJM System Operator Training Requirements.

Added Nuclear Power Plant voltage notification.

Revision 08 (1/01/05)

Miscellaneous member comments and reflect the retirement of the Back Up Analog Control System.

Revision 07 (5/15/04)

Miscellaneous member comments, not incorporated in Revision 6

Updated PJM List of Manuals

Revision 06 (3/31/04)

Added descriptions of the Generation Management System (GMS), the Process Control Test (PCT) System, the Back-Up Control Center () System, the PJM SCADA System, the OSI PI Data Historian System and clarified member obligations for ICCP communications including data integrity requirements and transmission monitoring requirements.

Revision 05 (12/31/03)

Added Attachment B: Nuclear Plant Communications Protocol, December 17, 2003

Revision 04 (05/01/03)

Revised Section 3: Communications & Data Exchange Requirements. Updated to include satellite phone requirements for generation operator control centers.

Revision 03 (04/04/03)

Complete revision of manual to reflect PJM Standards and Systems.

Revision 02 (12/31/00)

Removed Attachment A: Definitions and Abbreviations. Attachment A is being developed into a 'new' PJM Manual for ***Definitions and Acronyms (M35)***.

Revision 01 (04/01/98)

Attachment B: Information Access Matrix

Exhibit B.7: Grid Accounting Services revised to change "Market Clearing Price" to "Locational Marginal Price."

Revision 00 (07/30/97)

This revision is the preliminary draft of the PJM Manual for *Control Center Requirements*.